TSURUGA

MODEL 3585

Digital Resistance Meter

Operation Manual

I-02455

Contents

1. Preface **1**

1.1 Preparations prior to use 2

1.2 Confirmation prior to use 2

1.3 Warning and caution during measurement 3

2. Name of parts **4**

2.1 Front panel 4

2.2 Rear panel 5

2.3 Display Portion 6

3. Basic operation method **7**

3.1 Power supply 7

3.2 Connection of measuring terminals 7

3.2.1 Connection of measuring terminals (Model 5813-21B : Option) 7

3.2.2 Connection of temperature measurement terminals (Temperature sensor Model 5803-11 : Option) 8

3.3 Startup display (Self-check) 8

3.4 Measurement 9

3.5 Key lock 10

3.6 Zero adjustment 11

4. Setting operation **12**

4.1 Setting flow 12

4.1.1 MEMORY SET flow 13

4.1.2 GENERAL SET flow 14

4.1.3 SYSTEM SET flow 14

4.2 Memory 15

4.3 MEMOREY SET 16

4.3.1 Selection of Memory 17

4.3.2 Setting of Measurement function 17

4.3.3 Setting of Measurement range 18

4.3.4 Setting of comparator 19

4.3.5 Ratio display 20

4.3.6 Zero adjustment 22

4.3.7 Temperature correction (T.C.) 23

4.4 GENERAL SET 24

4.4.1 Setting of Sampling 25

4.4.2 Selection of memory setting by rear panel control 25

4.4.3 Setting of average number of sampling times 26

4.4.4 Setting of measuring current control. 27

4.4.5 Setting of Buzzer 28

4.4.6 Setting of communication 29

4.5 SYSTEM SET ····· 30
4.5.1 Setting of contrast ····· 30
4.5.2 Display of equipment information ····· 31

5. External control ····· 32

5.1 Control terminal ····· 32
5.1.1 Terminal arrangement ····· 32
5.1.2 Connection ····· 33
5.1.3 Input / output signal ····· 33
5.1.4 External control timing chart ····· 34
5.1.5 Memory operation ····· 36
5.1.6 Internal circuit configuration ····· 37

6. Communication (RS-232C) ····· 38

6.1 Specification ····· 38
6.1.1 Communication specification ····· 38
6.1.2 Connecter pin arrangement ····· 38
6.1.3 Operation ····· 39
6.2 List of communication command and response ····· 40

7. Analog output（Option） ····· 54

7.1 Output specifications ····· 54

8. BCD output (Option) ····· 55

8.1 Output specifications ····· 55
8.1.1 TTL output （-03） ····· 55
8.1.2 Open collector output （-04） ····· 55
8.2 Connector pin array ····· 56
8.3 Description of input and output signals ····· 57
8.3.1 Output signal ····· 57
8.3.2 Input signal ····· 58

9. Error display ····· 62

10. Use in panel-mount ····· 63

10.1 Assembly drawing ····· 63
10.2 External dimensions when fitted with panel-mount bracket ····· 63

11. Maintenance ····· 64

12. Failure symptom ····· 64

13. Specifications ····· 65

13.1 Model name ····· 65
13.2 Measuring range and accuracy ····· 65
13.3 General specifications ····· 67
13.4 Adaptability ····· 69
13.5 Initial setting list (at the factory shipment) ····· 70
13.6 External dimensions ····· 71

This page is blank.

1. Preface

The model 3585 is a digital resistance meter used for measuring resistance of motors, coils and etc.

3585 can perform the measurement with high speed samplings 90 times/sec with wide range of measurement from 30mΩ to 300 kΩ, with high resolution of 1μΩ and with high accuracy. Furthermore, temperature correction function and ratio display are originally equipped with 3585.

We would like to thank you for your purchase of our MODEL 3585. For safety and proper use of this product, please carefully read this operation manual before the use.

This product should be handled by persons having good knowledge in electricity.

The following symbol marks are used in this manual for the safety use of the product.

⚠ Warning This is the warning to avoid danger. Severe injure or fatal accident may occur to the user in case the product is mishandled.

⚠ Caution This is the caution to avoid danger. Minor injury to the user or physical obstacle may occur in case the product is mishandled.

⚠ Warning

- Do not open the case or modify the main body.
- Never touch the terminals when power is ON. There may be risk of electric shock.

⚠ Caution

- The instrument may be damaged if testing method not specified by manufacturer is used. Read the instruction manual carefully and understand the contents before the use.
- The rated data for warm up is specified for more than 30 minutes.
- To avoid break-down, malfunction or deterioration of life time, do not use this product in such places where:
  - ◆Exposed to rain, water drops or direct sunlight.
  - ◆High temperature or humidity, heavy dust or corrosive gas.
  - ◆Affected by external noise, radio waves or static electricity.
  - ◆Where there is constant vibration or shock.
- Store this product at -20 to 70 ℃.
- Wipe off front panel and housing with dry soft cloth. If necessary, use cloth with small amount of synthetic detergent for cleaning.
  Do not use an organic solvent such as thinner, benzine for front panel or housing cleaning, which might damage shape and color of front panel and housing.

1.1 Preparations prior to use

●Unpacking

When the tester is delivered, please check whether it conforms to the required specifications and has not been damaged in transit. If there is any damage on the tester or it does no work in conformity with the specifications, please inform us of the model and product name.

●Storage

In case of storing the tester for a long time, store it at the place of low humidity and where it is not exposed to the direct sunlight.

1.2 Confirmation prior to use

●Power supply

Use the tester with the power source voltage within 90 to 250VAC and the frequency 50 / 60Hz. When connecting the power supply cable, confirm that the power supply switch is turned OFF.

⚠ Warning

- Set the power switch for the instrument where it can be used very easily.
- To prevent an electric shock or failure of the unit, connect the power supply cord to a grounded 2 pole outlet.
- Don't unplug the power supply cord pulling the cord. Unplugging must be done holding the plug properly.

●Power supply cable

The plug of power supply cable connected to the tester is for 100VAC use. When the tester is used with 200VAC, replace the plug with appropriate one for 200VAC use. Please connect the power supply cable to the power supply connector on the rear panel of the tester. The plug of power supply cable has 3 pins and the round shape pin in the center is for grounding.

1.3 Warning and caution during measurement

Electric shock accident or malfunction

⚠ Warning

- In order to prevent the electric shock accident or the failure of this unit, do not apply voltage to the measurement terminal.
- In order to prevent the failure, conduct the measurement after turning off the power related to the measurement.
- In order to avoid electric shocks and to ensure the safety of the tester, protective earth connection is necessary. Connect the supplied power cord with ground insulating type bipolar outlet.
- When the tester is used, use the supplied power cord by the manufacturer only. If the power cord not specified by manufacturer is used, it may be the cause of fire.

Connection of the control cable and communication cable

⚠ Caution

- Use the specified cable size to connect the control terminal.
- Make sure that communication cable and control cable are connected surely. If the connection is not undertaken correctly, it may cause of the failure to satisfy specification or malfunction.
- Power supply must be turned off on each device before connection of communication cable and control cable. Failure to turn of the electric power cause the electric shock or malfunction.

Other caution

⚠ Caution

- If power supply is done by UPS (Uninterruptible power supply device) or DC-AC inverter, do not use rectangular wave or pseudo rectangular wave output of UPS or DC-AC inverter. If used, this may cause the malfunction of the instrument.

2. Name of parts

2.1 Front panel

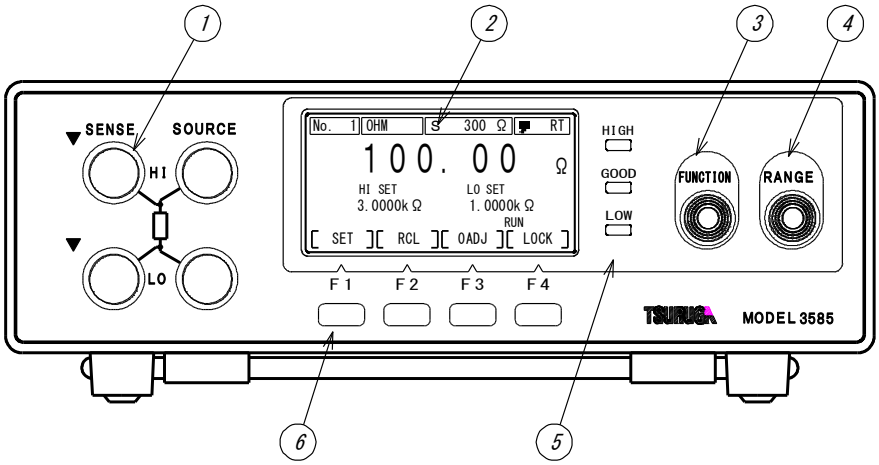

① Measuring terminal	SENSE Hi	: + Terminal of voltage input
	SENSE Lo	: - Terminal of voltage input
	SOURCE Hi	: + Terminal of current output
	SOURCE Lo	: - Terminal of current output
② Display Portion	Display setting like Measurement function, Measurement range, Measurement value, Comparator setting, Memory No. can be done.	
③ FUNCTION Key	It is used for selecting measurement function.	
④ RANGE Key	Setting range: 30mΩ to 300kΩ, AUTO range	
⑤ HIGH GOOD LOW	Red LED is lit up when the measured value exceeds the upper limit value. GOOD: Green lamp is lit up with a good judgment. Red lamp is lit up when the measured value exceeds the lower limit value.	
⑥ SETTING key	Key F1 to F4 are used for setting the measurement condition, device setting etc.	

2.2 Rear panel

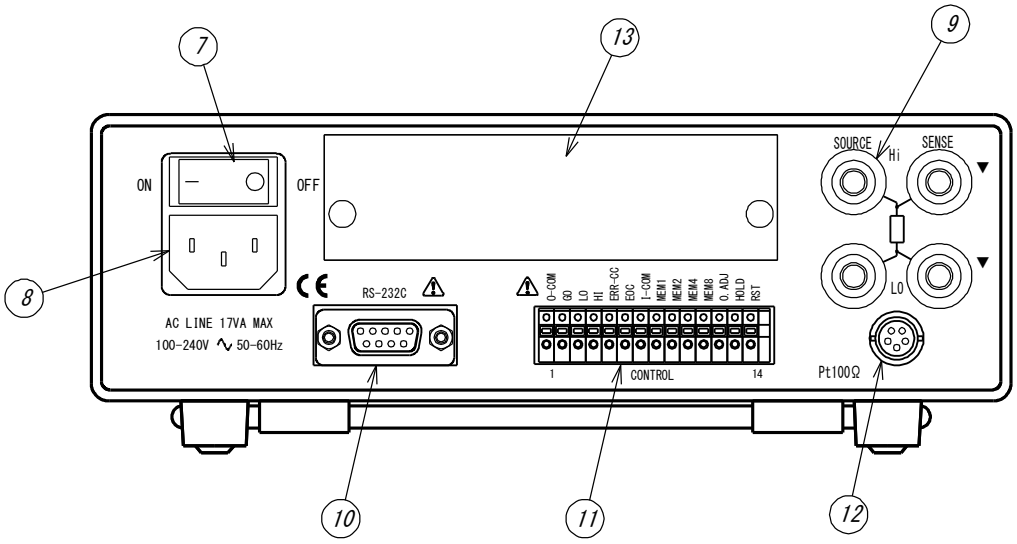

⑦ Power supply switch — Power supply ON/OFF switch

⑧ Power inlet — Connect the supplied power supply cord. Use the power supply voltage and frequency within the specified range.

⑨ Rear measuring Terminal

SENSE Hi : + Terminal of voltage input
SENSE Lo : - Terminal of voltage input
SOURCE Hi : + Terminal of current output
SOURCE Lo : - Terminal of current output

⑩ RS-232C connecter — Connector for RS-232C communication

⑪ Input and output Terminal — Terminals for external control

⑫ Input terminal — The connector of Pt100Ω temperature sensor.
Accessory temperature sensor (5803-11) is connected for temperature correction function.

⑬ Interface board mounting part

This is Installation part area for the BCD interface board or analog output board.

2.3 Display Portion

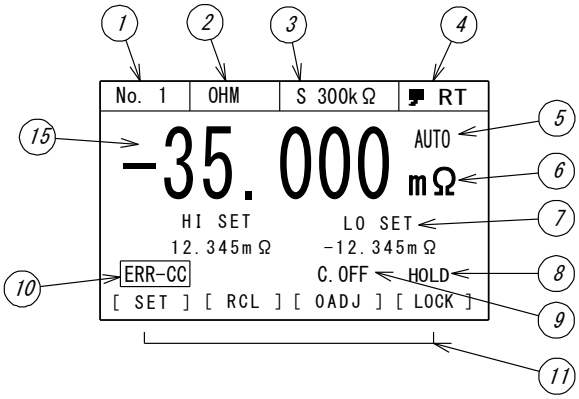

① Memory No.	Displays memory No. (No.1 to No.15)
②Function	Displays measurement function OHM : Resistance measurement T.C. : Temperature correction OHM R : Resistance measurement Ratio display T.C.R : Temperature correction Ratio display TEMP : Temperature measurement
③Sampling	Displays sampling rate S : Sampling rate 200ms M : Sampling rate 50ms F : Sampling rate 11.1ms
Range	Displays the measured range. 30mΩ, 300mΩ, 3Ω, 30Ω, 300Ω, 3kΩ, 30kΩ, 300kΩ
④External control	Displays the status of outer control. RT : Memory is controlled from the rear panel terminal RB : Controlled from BCD : RS-232C communication is ON
⑤Auto-range	Displays the setting of Auto-range measurement AUTO : Auto-range ON (None) : Auto-range OFF
⑥Unit	Measurement unit mΩ : Range of 30mΩ and 300mΩ Ω : Range of 3Ω, 30Ω and 300Ω kΩ : Range of 3kΩ, 30kΩ and 300kΩ
⑦Comparator	Displays the setting of comparator HI SET : Upper limit value of the comparator LO SET : Lower limit value of the comparator
⑧Hold	Display the condition of sampling RUN : Sampling is in process HOLD : Sampling is stopped and HOLD status
⑨Current cut	During the hold of sampling, measured current is off. C.OFF : Current cut function is valid (None) : Current cut function is not valid.
⑩Source open	Displays when the source terminal is open or the value exceeds the measurement range drastically.
⑪Key guidance	Displays the detail of keys F1 to F4.

3. Basic operation method

3.1 Power supply

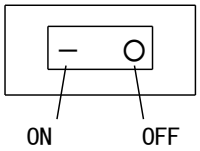

First confirm the power OFF of the switch located at the rear panel of the instrument and connect cord to the power supply. Then, ON the power supply switch. This instrument becomes in operation condition immediately but it is preferred for preheating for 30 minutes before the use.

As this instrument is equipped with a parameter holding function, following (1) to (3) status can be memorized even though the power supply is turned OFF.

（1）15 sets of memories（Measurement conditions such as measurement function, ranges, comparator settings, zero adjustment settings）

（2）Key lock state

（3）Various types of setting

3.2 Connection of measuring terminals

3.2.1 Connection of measuring terminals (Model 5811-21C : Option)

Measuring cables are connected to the measuring terminals on either front panel or rear panel. Terminals on front and rear panel cannot be used simultaneously.

Kelvin clips are to be connected as follows.

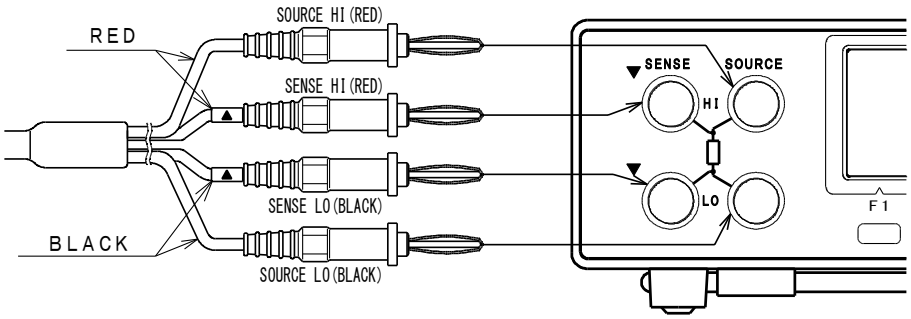

Connection with the device （Connection by four-terminal method）

Measurement wires are connected with 4 cables to the measured specimen.

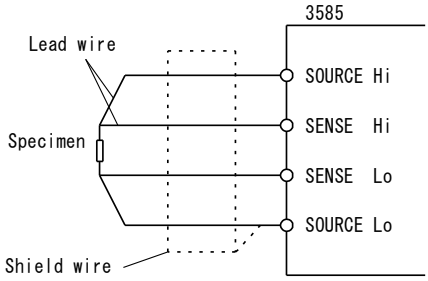

Note: Penetration of disturbing noise to the measuring terminals may cause instability or display or auto range operation. Prevent the noise by connecting with shield wire the shield side to SOURCE Lo. If all 4 wires are not connected properly, the displayed value may be fluctuated.

3.2.2 Connection of temperature measurement terminals (Temperature sensor Model 5803-11 : Option)

Temperature sensor is connected during temperature measurement (TEMP), temperature correction (T.C and T.C RATIO).

Temperature sensor is connected to temperature sensor connector of rear panel.

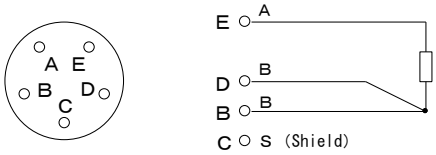

Used connector : R05-R5F
Corresponding plug : R05F-PB5M

3.3 Startup display (Self-check)

Self-check screen is displayed for approx. 5 sec. after Power ON., then the display shifts to measurement display.

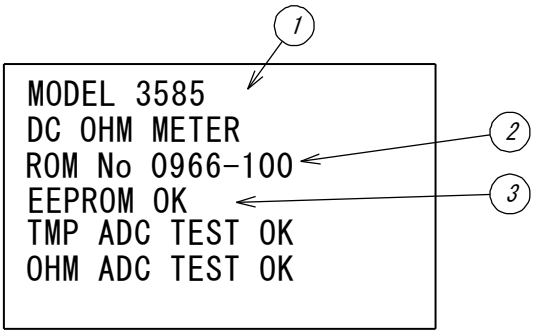

① Model name — Model name and output option

- 3585-X (None)
- 3585-03 : BCD TTL output
- 3585-04N : BCD OC NPN output
- 3585-04P : BCD OC PNP output
- 3585-07 : Analog output

② ROM No. — The number of the firmware.

③ Self-check result — The result of self-check of internal circuit.

- EEPROM OK : Memories like setting value are checked
- TMP ADC TEST OK : The test result of ADC for temperature
- OHM ADC TEST OK : The test result of ADC for resistance

① If the self-test is not good, it shows FAIL.

② In case of FAIL, if FUNCTION key is pressed, display can be changed to measurement mode, but the correct measurement cannot be obtained. Contact the nearest distributor or TSURUGA Electric Corporation office.

Refer to “12. Failure symptom”

3.4 Measurement

① When POWER supply is turned ON, self-check is done, the screen shifts measurement display.

② The measurement function is set by pressing 'FUNCTION' key.
To measure resistance, choose 'OHM'.

③ Select the measurement range by pressing 'RANGE' key.
If the resistance value is unknown, choose 'AUTO' range.
Pressing 'RANGE' key for more than 1 sec., ON/OFF of 'AUTO' range can be chosen either ON or OFF.
During 'AUTO' range, 'AUTO' is displayed above the unit on the screen.

④ The result is displayed, when the measurement cable is connected with the instrument and object to be measured.

⑤ Refer to "4. Measurement method" for setting of sampling, comparator and etc.

Function	: OHM	Resistance measurement
	T.C.	Temperature correction
	T.C.R	Temperature correction ratio display
	OHMR	Resistance ratio display
	TEMP	Temperature measurement
Range	: 30mΩ	Measuring at 30mΩ range
	300mΩ	Measuring at 300mΩ range
	3Ω	Measuring at 3Ω range
	30Ω	Measuring at 30Ω range
	300Ω	Measuring at 300Ω range
	3 kΩ	Measuring at 3 kΩ range
	30 kΩ	Measuring at 30 kΩ range
	300 kΩ	Measuring at 300 kΩ range
	AUTO	Measuring with automatically switched range between 30mΩ to 300 kΩ range

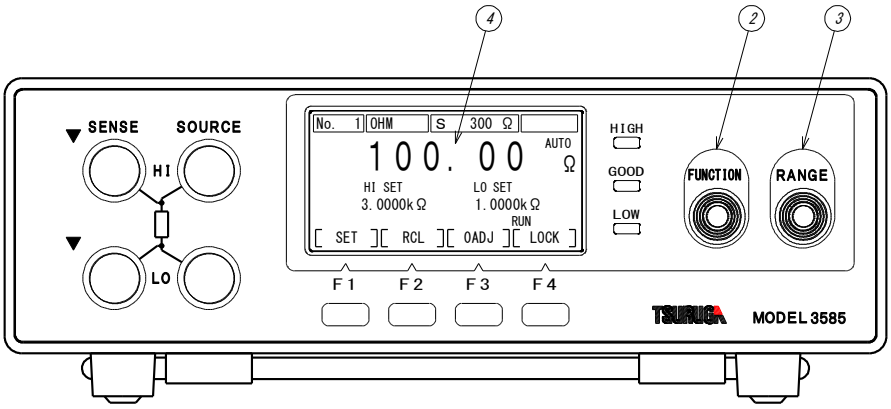

3.5 Key lock

It is a switch that prohibits operation of the instrument from the front panel in order to avoid the measurement by unintentional change of setting. Display of the LOCK is converted to reverse color during key lock condition. If other keys are required to use during key lock condition, key lock must be released first to use the other keys.

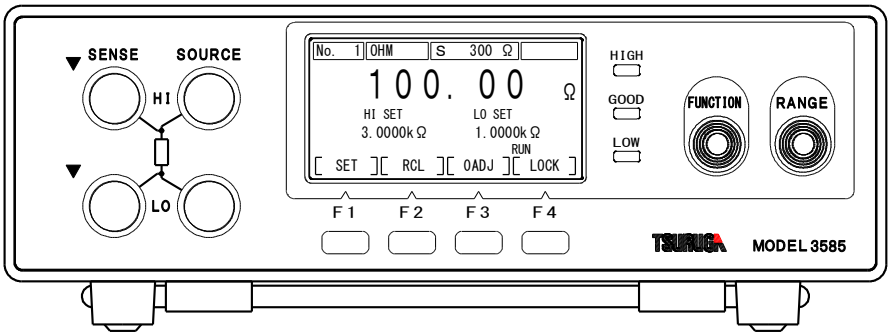

●Key lock method

Press F4 [LOCK] key for more than 3 sec.

Display of the LOCK is converted to reverse color which shows that instrument is in locked condition.

●Cancellation of key lock

During the key in locked condition, press F4 [LOCK] key for more than 3 s.

Key lock will be released.

3.6 Zero adjustment

This is the function to eliminate the external cable resistance and connection fixtures during resistance measurement.

Zero adjusted value is subtracted from the measured value and remaining value is displayed.

Display value	=	Measured value	–	Zero adjust value

Note) Zero adjustment is not done for temperature measurement (TEMP).
The zero adjustment is done in the upper range, over measurement may occur in lower range.

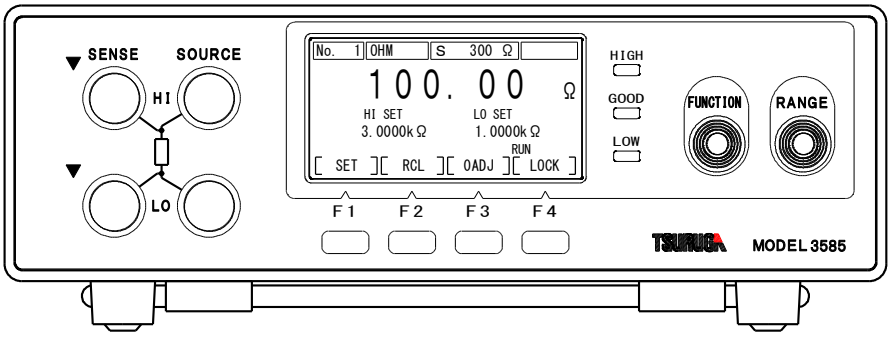

●ON/OFF of Zero adjustment function

Pressing 'F3'[0ADJ] key to switch ON/OFF of zero adjustment.

[0ADJ] is converted to reverse display when zero adjustment is ON.

●Memory of Zero adjustment value

The measured value is saved as zero adjustment value when [0ADJ] key is pressed more than 1 sec. during OFF state of zero adjustment.

4. Setting operation

4.1 Setting flow

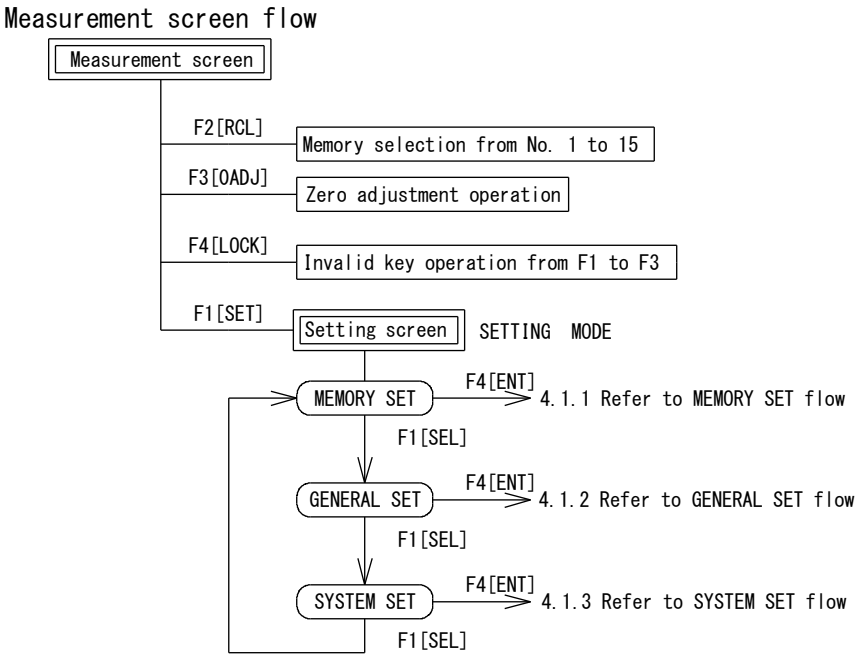

Setting screen

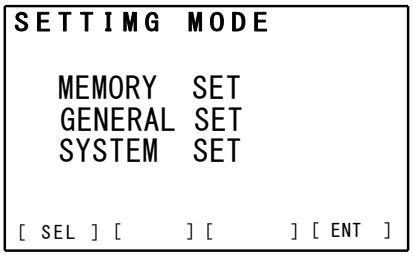

4.1.1 MEMORY SET flow

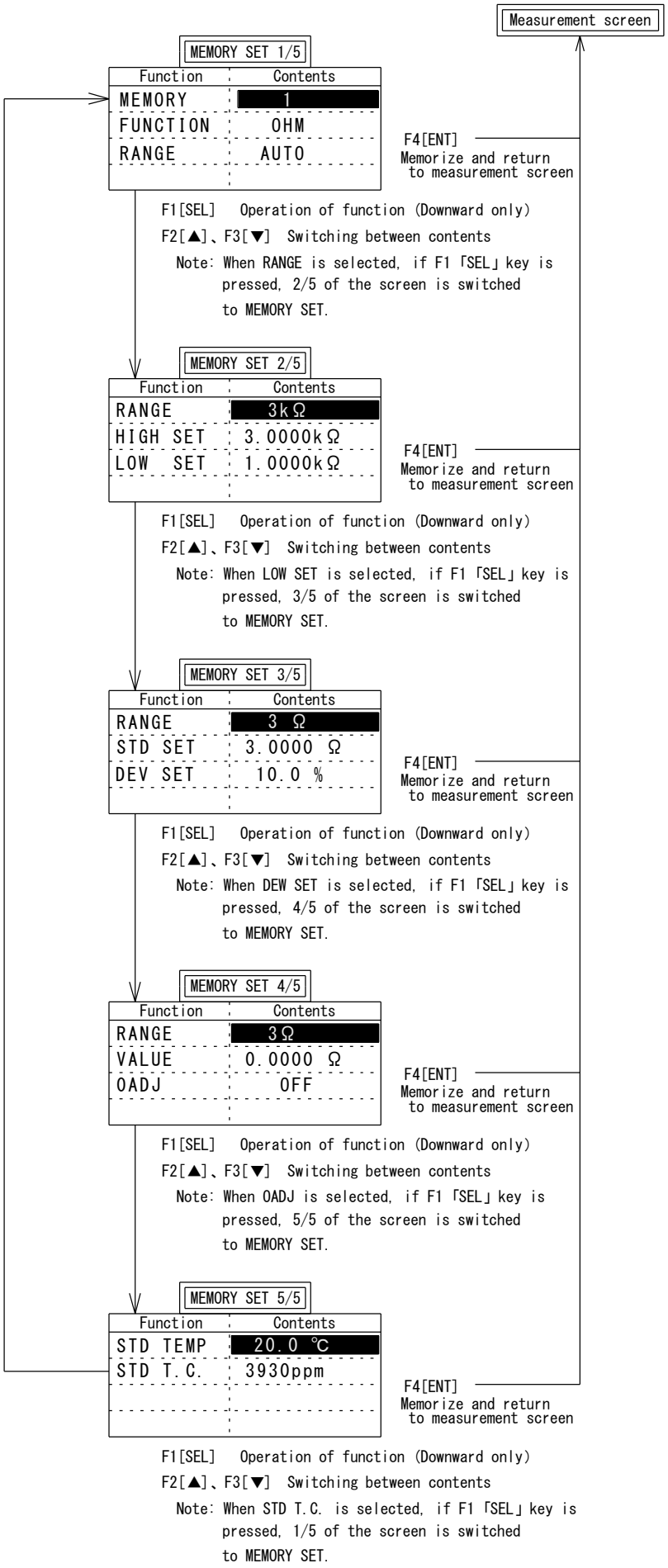

4.1.2 GENERAL SET flow

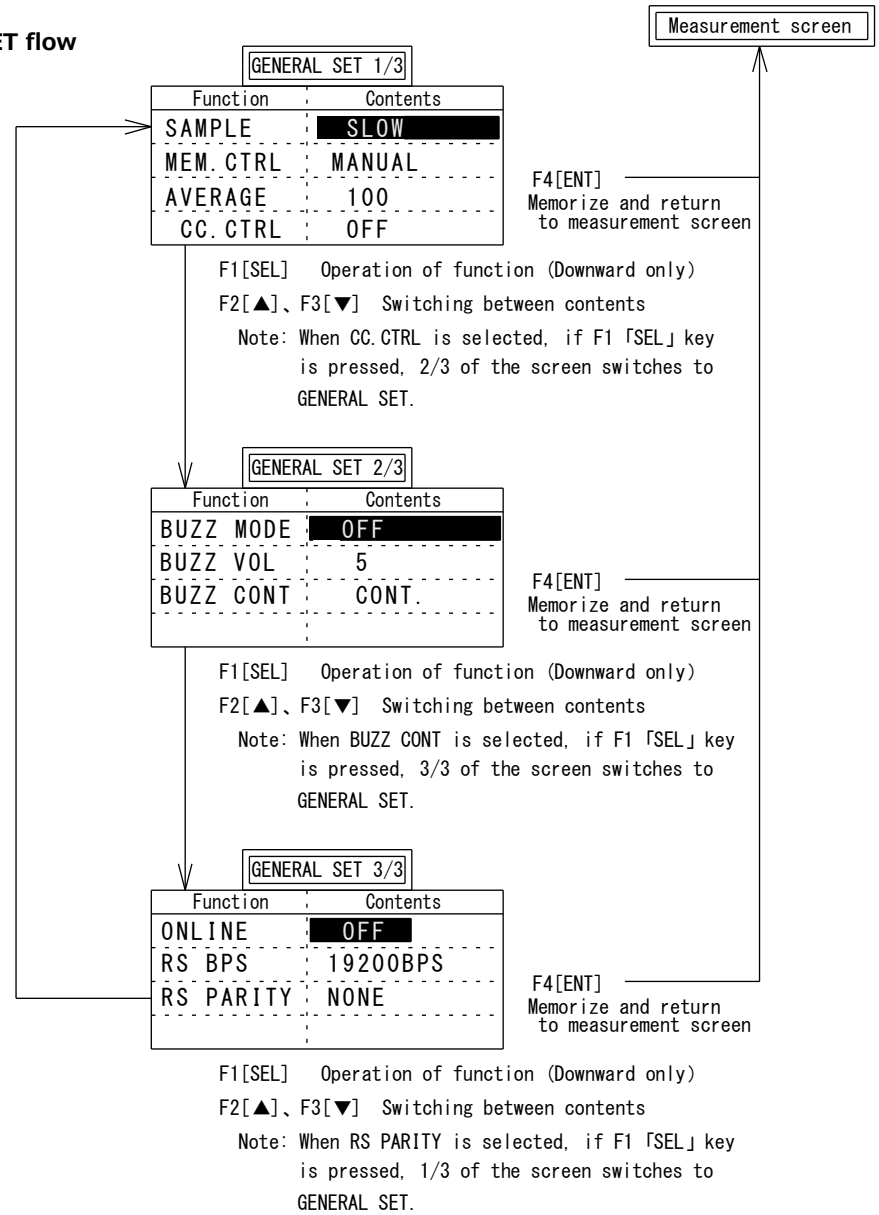

4.1.3 SYSTEM SET flow

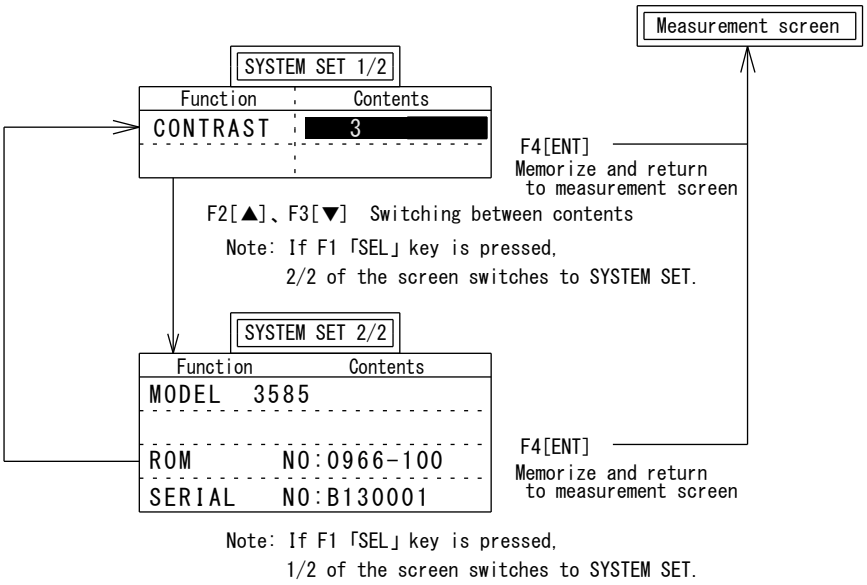

4.2 Memory

This instrument is equipped with 15 pairs of memories that store comparator and measurement conditions. The following 6 items are available for memory storage.

- ・Measurement function
- ・Measurement range
- ・Setting of comparator（Upper limit value, Lower limit value, Range）
- ・Standard value of ratio calculation and deviation
- ・Zaro adjust value and operation
- ・The standard temperature and temperature coefficient for calculation of temperature correction

Note: Setting can't be done in ONLINE condition.
Memory cannot be set during memory valid selection signal.
Memory cannot be selected during HOLD.

[Selection of memory]

●Method from front panel

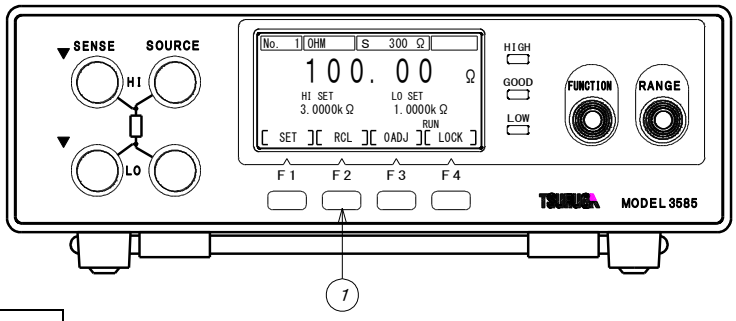

Call

When F2 [RCL] key (①) is pressed in standby state, memory No. will be increased, set state is called and displayed.
Memory No. from 1 to 15 can be selected.

●Method from external control

Refer to memory operation (5.1.5) for detailed instruction.

[Memory registration]

After selecting the storage No., set Measurement mode, Measurement range, Comparator, Timer and etc. can be set in MEMORY SET.

4.3 MEMOREY SET

Memory No., Measurement function, Measurement range, Comparator, Ratio calculation, zero adjustment and Temperature correction can be set at Memory setting.

MEMORY SET

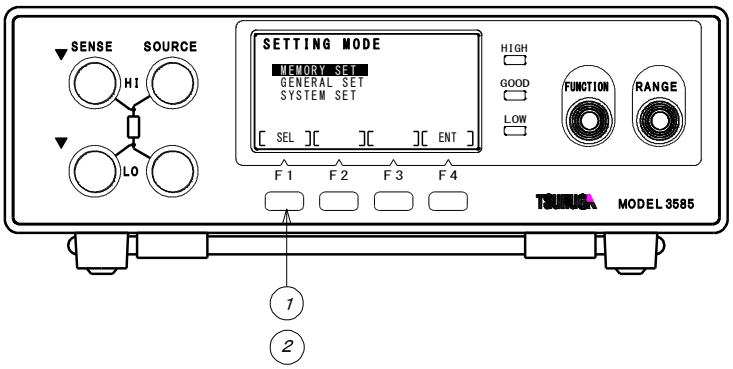

① Press F1 [SET] key in standby state.
Display changes to SETTING MODE.

② Press F4 [ENT] key to change memory setting.

Basic operation

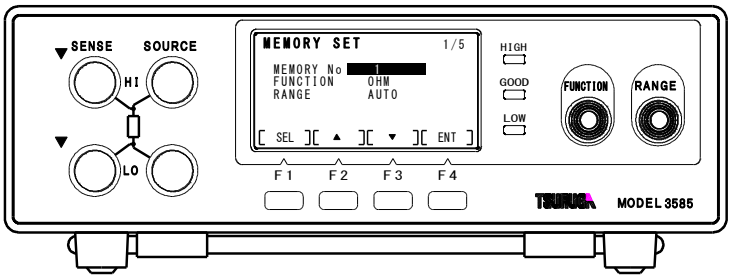

Operation key

F1 [SEL]	:	Select setting item (Forward).
FUNCTION	:	Select setting item (Reverse).
RANGE	:	Select setting item (Forward. Same as F1 [SEL]). The selected item is converted to reverse color.
F2 [▲]·F3 [▼]	:	Select a setting item or change the setting value. Setting value can be increased(▲) or decreased(▼) by numerical setting.
F4 [ENT]	:	Save the setting and the display returns to measurement standby state.

4.3.1 Selection of Memory

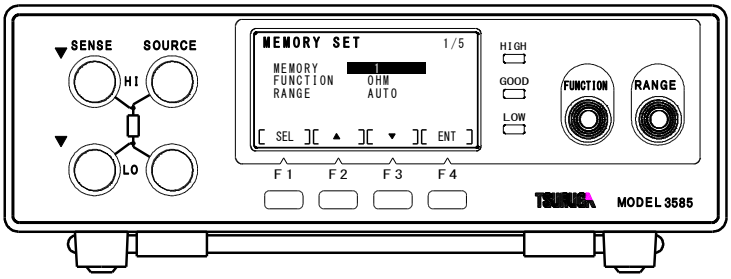

① Press F1 [SEL] key to select the MEMORY No. and pressF4(ENT) key.

② Select the Memory No. by F2 [▲], F3 [▼] key.

③ Press F4 [ENT] to save the setting and the display returns to measurement standby state.
To continue other setting, select the items by pressing F1 [SEL]

MEMEORY : No. 1 to No. 15 (Memory No.)

4.3.2 Setting of Measurement function

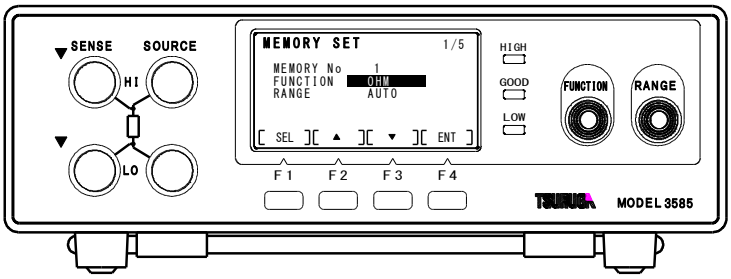

① Press F1 [SEL] key to select the MEMORY SET and press F4 (ENT).
Press F1 (SEL) again to select the Function.

② Press F2 [▲], F3 [▼] key to select measurement function.

③ Press F4 [ENT] to save the setting and the display returns to measurement standby state.
To continue other setting, select the items by pressing F1 [SEL].

Available FUNCTION	: OHM	Resistance measurement
	T.C.	Temperature correction
	T.C.R	Temperature correction ration display
	OHM R	Resistance ratio display
	TEMP	Temperature measurement

4.3.3 Setting of Measurement range

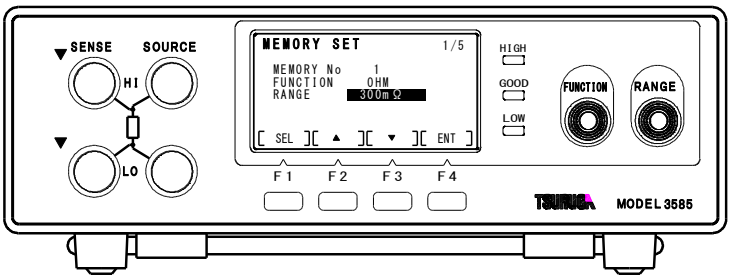

① Press F1 [SEL] key to select MEMEORY SET and press F4 [ENT] key.
Select RANGE by F1 [SEL] KEY.

② Press F2 [▲], F3 [▼] key to select measurement range.

③ Press F4 [ENT] to save the setting and display returns to measurement standby state.
To continue other setting, select the items by pressing F1 [SEL].

RANGE	: 30mΩ	Measuring at 30mΩ range
	300mΩ	Measuring at 300mΩ range
	3Ω	Measuring at 3Ω range
	30Ω	Measuring at 30Ω range
	300Ω	Measuring at 300Ω range
	3 kΩ	Measuring at 3 kΩ range
	30 kΩ	Measuring at 30 kΩ range
	300 kΩ	Measuring at 300 kΩ range
	AUTO	Measuring for automatic switching range from 30mΩ to 300 kΩ.

4.3.4 Setting of comparator

Digital comparator can show the comparison result of the displayed value and the upper limit, lower limit value.

Comparison condition

Displayed value ≧ Upper limit set value（HIGH）	HIGH(HI)	output
Upper limit set value（HIGH）＞Displayed value ＞Lower limit set value（LOW）		
	GOOD(GO)	output
Displayed value ≦Lower limit set value（LOW）	LOW(LO)	output
Over is displayed（OVER）	HIGH(HI)	output
Under is displayed（UNDER）	LOW(LO)	output

Comparison output

The open collector output can be obtained from the terminal of rear side.

(Refer to section 5.1 External control)

Display HIGH, LOW : Red

GOOD : Green

Setting range

Comparator can be set from -19999 to 35000

Range can be set at 30mΩ, 300mΩ, 3Ω, 30Ω, 300Ω, 3kΩ, 30kΩ and 300kΩ.

Setting method

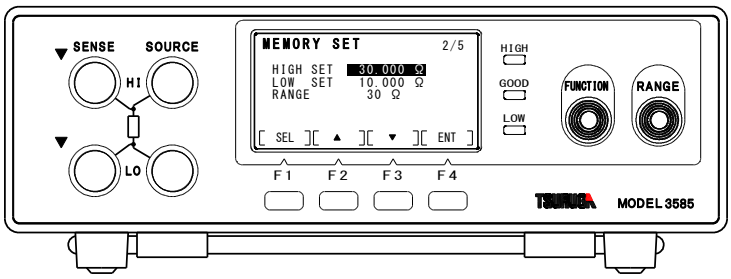

① Press F1 [SEL] key to select MEMORY SET and press F4 [ENT] key to fix it
Select HIGH SET or LOW SET or RANGE by F1 [SEL] key.
(Selection of setting items can be chosen either forward or reverse way by FUNCTION and RANGE key respectively.)

② Press F2 [▲], F3 [▼] key to change the setting values.
If F2(▲), F3(▼) are pressed continuously, HIGH set and LOW set can be changed in 3 steps.

③ Press F1 [SEL] to select RANGE.

④ Press F2 [▲], F3 [▼] KEY to change the setting
The decimal point and unit of 'HIGH SET', 'LOW SET' are changed accordingly.

⑤ Press F4 [ENT] to save the setting and the display returns to measuring mode.
To continue other setting, select the item by pressing F1 [SEL].

4.3.5 Ratio display

It is a function displayed in percentage with respect to standard resistance value by comparing measured resistance value Rx and standard resistance value Rs.
The comparison judgment (±△%) of deviation can be done.

Equation)

$$X = \frac{Rx}{Rs} \times 100\%$$

$$\Delta = \left(\frac{Rx}{Rs} - 1\right) \times 100\%$$

X : Ratio (%)
Rs : Standard resistance (Ω) STD SET
Rx : Measured resistance value (Ω) DEV STD
△ : Deviation (%)

Display range -199.9 - 199.9%
'OVER' or 'UNDER' is displayed, when the value exceeds display range.

Comparison operation

Comparison operation ±△%
Compare values regarding 'DEVSET' as upper and lower deviation.
When comparison range △% is set to 10.0%, ±10% of the range corresponding to 100% is made GO judgment.

LOW judgment : -199.9 to 90.0%, UNDER
GOOD judgment : 90.1 to 109.9%
HIGH judgment : 110.0% - 199.9%, OVER

Comparison output

The open collector output can be obtained from the terminal of rear side.
(Refer to section 5.1 Control terminal)

Display HIGH, LOW : Red
GOOD : Green

Setting range

STD SET can be set from 00000 to 35000
DEV SET can be set from 0.0% to 100.0%
Range can be set at 30mΩ, 300mΩ, 3Ω, 30Ω, 300Ω, 3kΩ, 30kΩ and 300kΩ.

Setting method

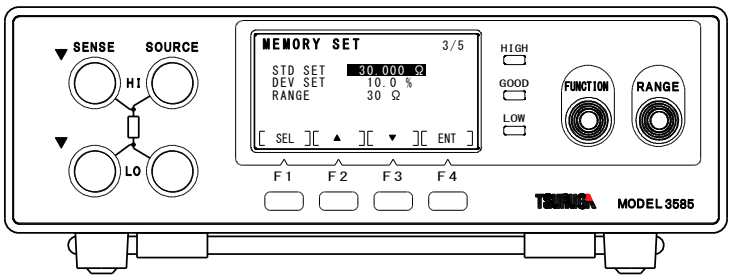

① Press F1 [SEL] key to select MEMORY SET and press F4 [ENT] key.
Select STD SET, DEV SET or RANGE by F1 [SEL] key.
(Selection of setting items can be chosen either forward or reverse way by FUNCTION and RANGE key respectively.)

② Press F2 [▲], F3 [▼] key to change the setting values.
If F2(▲) and F3(▼) are pressed continuously, STD set, DEV set can be changed in 3 steps.

③ Press F1 [SEL] to select RANGE.

④ Press F2 [▲], F3 [▼] KEY to change the setting
The decimal point and unit of 'HIGH SET', 'LOW SET' are changed accordingly.

⑤ Press F4 [ENT] to save the setting and the display returns to measuring mode.
To continue the other setting, select the items by pressing F1 [SEL].

4.3.6 Zero adjustment

This is the function to eliminate the external cable resistance and connection fixtures etc. The value where zero adjust value is subtracted from the measured value is displayed.

Display value = Measured value − Zero adjust value

Setting method

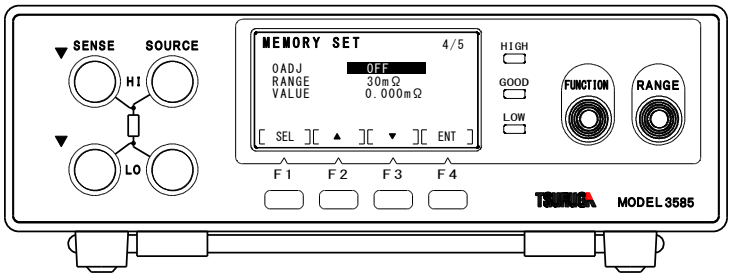

① Press F1 [SEL] key to select MEMORY SET and press F4 [ENT] key.
(Selection of setting items can be chosen either forward or reverse way by FUNCTION and RANGE key respectively.)
Select 0ADJ or RANGE by pressing F1 [SEL] key.

② Press F2 [▲], F3 [▼] key to change the setting values.

③ Select VALUE by pressing F1 [SEL] key.

④ Press F2 [▲], F3 [▼] key to change the setting.
If F2(▲) and F3(▼) are pressed continuously, the speed can be changed in 3 steps.

⑤ Press F4 [ENT] to save the setting and the display returns to measurement mode.
If 0ADJ is set ON and the setting operation is stopped, zero adjustment operation is activated.
To continue other setting, select the items by pressing F1 [SEL].

Operation of zero adjustment key (F3: 0ADJ)

ON/OFF of zero adjustment function can be set by pressing 0ADJ key (F3) during measurement.
The calculation is done according to the set zero adjustment.
Pressing 0ADJ key (F3) for more than 1 sec., the measured value is saved and the calculation is done.

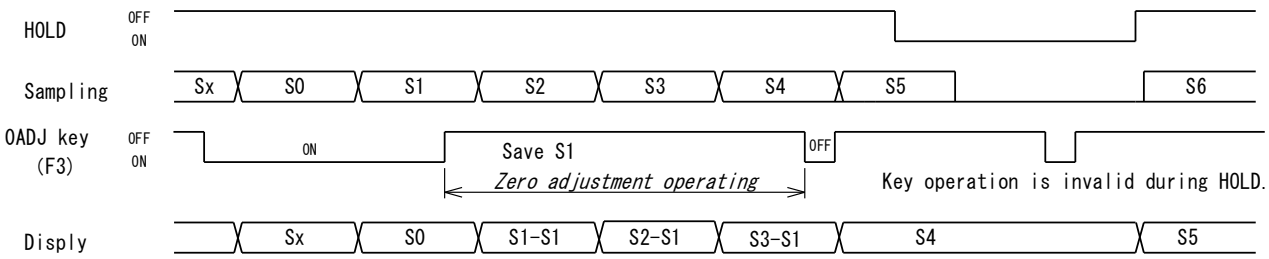

4.3.7 Temperature correction (T.C.)

The conductor resistance and ambient temperature are measured, and temperature correction is computed and displayed considering conduct resistance as reference value.
The standard temperature and temperature coefficient can be set in the range of 0 to 99.9 ℃ and 1000 to 19999 ppm respectively.
The ambient temperature is measured by connecting temperature sensor Pt100Ω.

Equation) $$R_T = \frac{\mathrm{R\ t}}{1+(\alpha\times10^{-6})\times(t-T)} \qquad (\Omega)$$

t : Ambient temperature (℃)
R_T : Resistance Correction (Ω)
Rt : Resistance value at t℃ (Ω)
α : Temperature coefficient
Setting range from 1000 to 19999ppm
T : Standard temperature
Setting range 0.0 to 99.9℃
Range of calculation : Max. 39999
When the calculation result exceeds 39999, OVER is displayed.
The accuracy during the temperature correction works: ± 0.3% of rdg. is added to the accuracy of resistance measurement.

Setting method

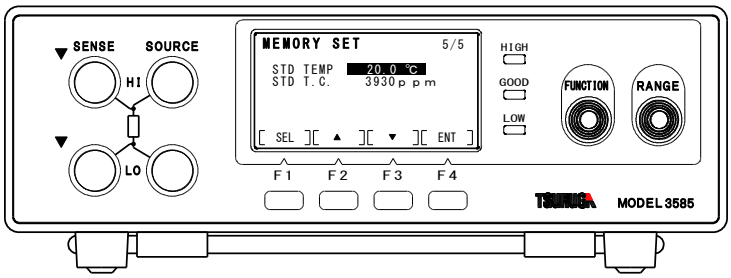

① Press F1 [SEL] key to select MEMORY SET and press F4 [ENT] key.
Select STD TEMP or STD T.C by pressing F1 [SEL] key.
(Selection of setting items can be chosen either forward or reverse way by FUNCTION and RANGE key respectively.)

② Press F2 [▲], F3 [▼] key to change the setting value.
If the key is pressed continuously, speed can be changed in 3 steps.

③ Press F4 [ENT] to save the setting and displays returns to measurement mode.
To continue other setting, select the items by pressing F1 [SEL].

4.4 GENERAL SET

Sampling cycle, external control, averaging process, measuring current control function, buzzer and communication can be set in GENERAL SET.

Select GENERAL SET

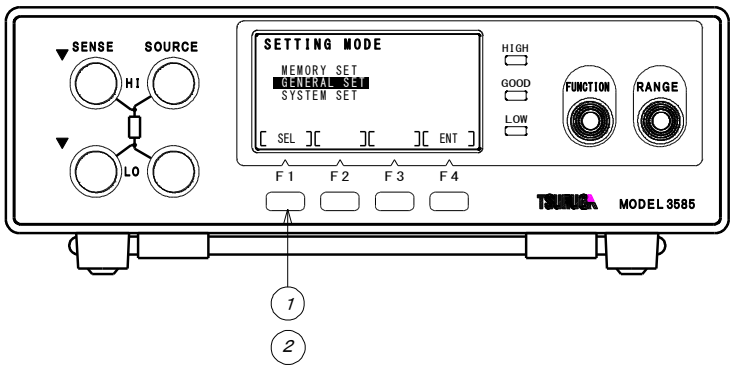

① Press the F1 [SET] key in the standby state.
Display changes to SETTING MODE.

② Press F1 [SEL] key and select GENERAL SET.
If F4 [ENT] is pressed, display changes to equipment setting.

Basic operation

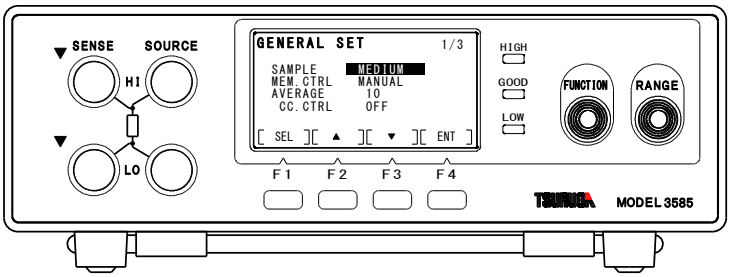

Operation key

F1 [SEL]	: Select setting item (Forward).
FUNCTION	: Select setting item (Reverse).
RANGE	: Select setting item (Forward. Same as F1 [SEL]). The color of selected item is converted to reverse color.
F2 [▲], F3 [▼]	: Setting values can be changed.
F4 [ENT]	: Save the set value and the display returns to the measurement mode.

4.4.1 Setting of Sampling

The sampling speed of resistance measurement can be set.

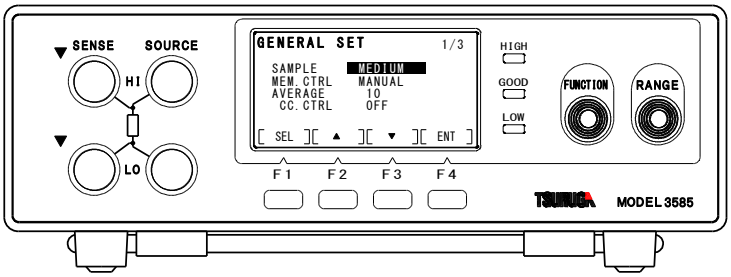

① Press F1 [SEL] key to select GENERAL SET and press F4 [ENT] key.
Select SAMPLE by pressing F1 [SEL] key.
(Selection of setting items can be chosen either forward or reverse way by FUNCTION and RANGE key respectively.)

② Press F2 [▲], F3 [▼] key to select SLOW / MEDIUM / FAST.

③ Press F4 [ENT] to save the setting and the display returns to the measuring mode.
To continue other setting, select the items by pressing F1 [SEL].

4.4.2 Selection of memory setting by rear panel control

Rear terminals can be used for setting enable / disable of the memory selection.

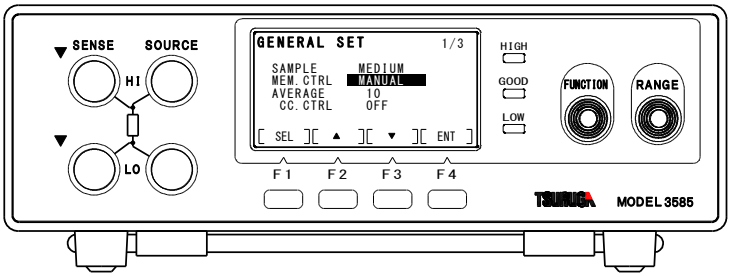

① Press F1 [SEL] key to select GENERAL SET and press F4 [ENT] key.
Select MEM. CRTL by pressing F1 [SEL] key.
(Selection of setting items can be chosen either forward or reverse way by FUNCTION and RANGE key respectively.)

② Press F2 [▲], F3 [▼] to select MANUAL / REMOTE
MANUAL : Memory is selected by operation of the front panel F2[RCL] key.
REMOTE : Memory is selected by MEM1, MEM2, MEM4, MEM8 of rear control terminals.

③ Press F4 [ENT] to save the setting and display returns to measurement mode.
To continue other setting, select the items by pressing F1 [SEL].

4.4.3 Setting of average number of sampling times

Setting of average sampling number of resistance measurement can be done.

Measured resistance value is displayed by calculating moving average value.

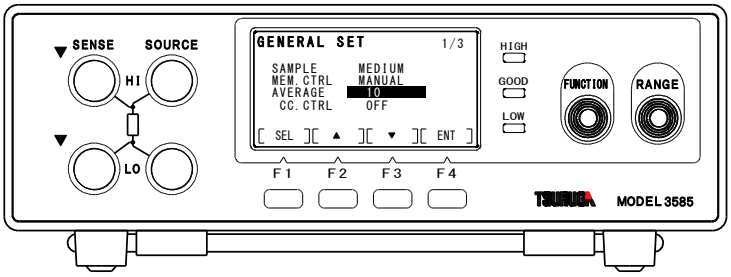

① Press F1 [SEL] key to select GENERAL SET and press F4 [ENT] key.
Select AVERAGE by pressing F1 [SEL] key.
(Selection of setting items can be chosen either forward or reverse way by FUNCTION and RANGE key respectively.)

② Press F2 [▲], F3 [▼] to set average number of sampling times.
Setting range : 1 to 100 times

③ Press F4 [ENT] to save the setting and display returns to measurement mode.
To continue the other setting, select the items by pressing F1 [SEL].

When the average sampling number is set 3 times,

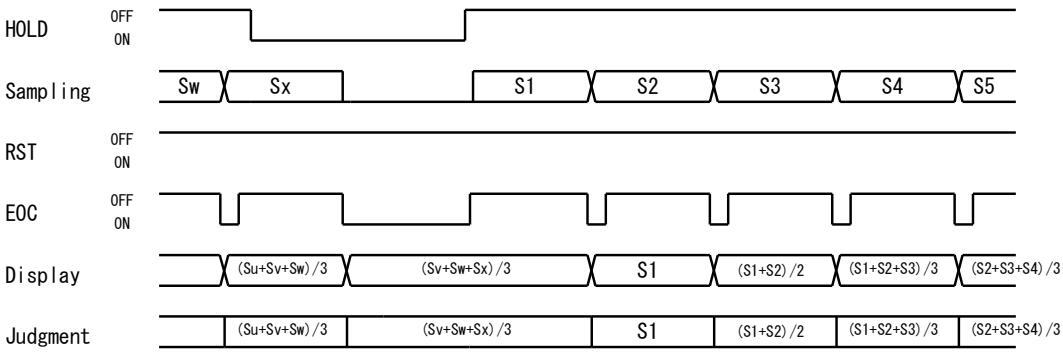

4.4.4 Setting of measuring current control.

Setting of the measuring current can be controlled during resistance measurement.

When the setting is ON and SAMPLING HOLD is ON, measurement current is set OFF.

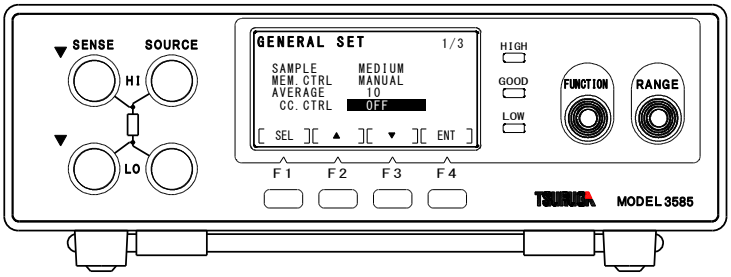

① Press F1 [SEL] key to select GENERAL and press F4 [ENT] key.

Select CC. CTRL by pressing F1 [SEL] key.

(Selection of setting items can be chosen either forward or reverse way by FUNCTION and RANGE key respectively.)

② Press F2 [▲], F3 [▼] key to select ON/OFF.

ON : Measuring current is set OFF when SAMPLING HOLD is ON.

C.OFF is displayed, when measurement current is set OFF.

OFF : Control of the current is not done. The output current is applied continuously.

③ Press F4 [ENT] to save the setting and display returns to measurement mode.

To continue the other setting, select the items by pressing F1 [SEL].

When the control of measuring current is ON,

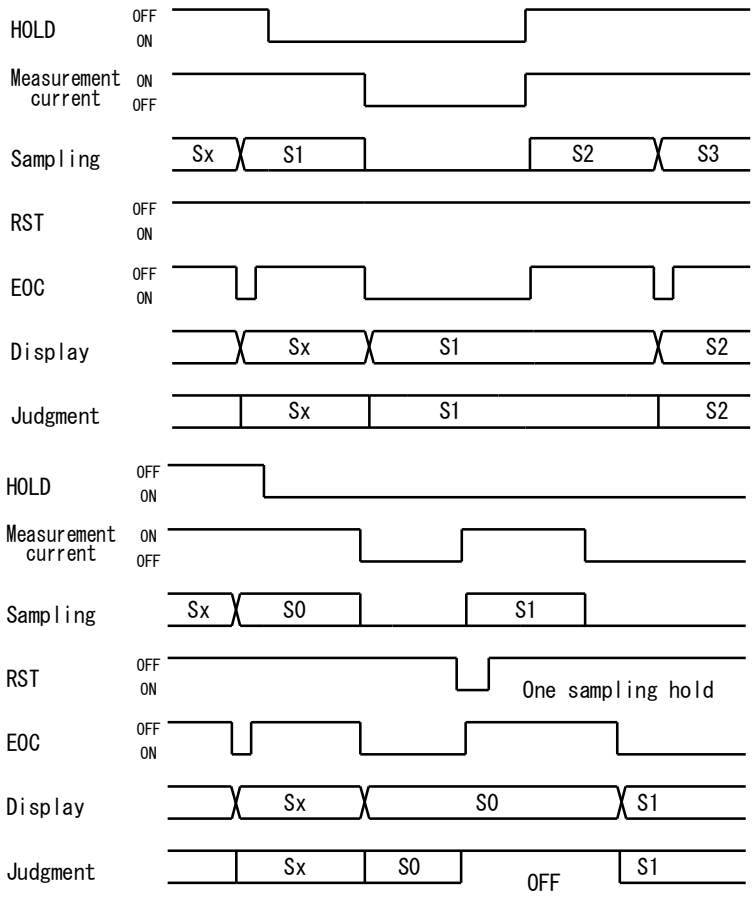

4.4.5 Setting of Buzzer

Buzzer operation and volume of sound can be set.

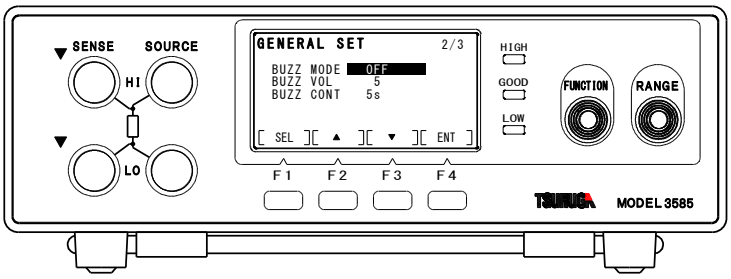

① Press F1 [SEL] key to select GENERAL SET and press F4 [ENT] key.
Select BUZZ MODE / BUZZ VOL / BUZZ CONT by pressing F1 [SEL] key.
(Selection of setting items can be chosen either forward or reverse way by FUNCTION and RANGE key respectively.)

② Press F2 [▲], F3 [▼] key to change the setting.

BUZZ MODE

The condition of buzzer ringing is set.

GOOD : Ring the buzzer during GOOD judgment.
NG : Ring the buzzer during HIGH or LOW judgment.
HI : Ring the buzzer during HIGH judgment.
LO : Ring the buzzer during LOW judgment.
OFF : No judgment buzzer.

BUZZ VOL

Setting range: 1 to 9

BUZZ CONT

The condition of buzzer ringing time is set.

CONT. : Ring buzzer continuously.
1s : Ring buzzer for 1 sec.
5s : Ring buzzer for 5 sec.

③ Press F4 [ENT] to save the setting and display returns to measurement mode
To continue other setting, select the items by pressing F1 [SEL].

4.4.6 Setting of communication

RS-232C communication setting is carried out here.

ON/OFF of communication function is carried out by ONLINE setting.

The setting of communication speed by the RS BPS and setting of parity bit by RS PARITY are carried out. The communication speed and parity bit should be set according to the setting of higher level equipment like PC etc.

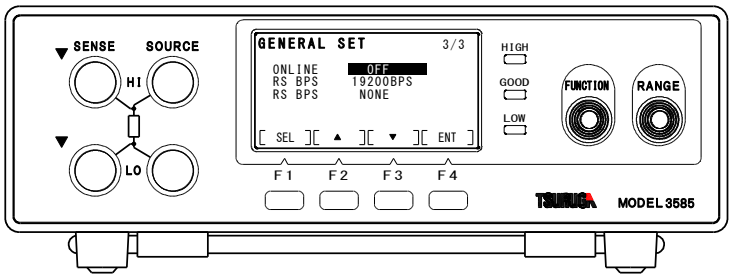

① Press F1 [SEL] key to select GENERAL SET and press F4 [ENT] key.
Select ONLINE, RS BPS, RS PARITY by pressing F1 [SEL] key.
(Selection of setting items can be chosen either forward or reverse way by FUNCTION and RANGE key respectively.)

② Press F2 [▲], F3 [▼] key to select setting as below.

ONLINE : ON/OFF of the communication function
Output of RS-232C communication can be obtained with ON.
To get the communication through RS-232C, ONLINE must be set to ON condition.)

RS BPS : Set communication speed
9600bps, 19200bps, 38400bps

RS PARITY : Set parity bit of communication data.
NONE
ODD
EVEN

③ Press F4 [ENT] to save the setting and the display returns to measurement mode.
To continue the other setting, select the items by pressing F1 [SEL].

4.5 SYSTEM SET

The contrast of display is adjusted and equipment information is shown.

Select SYSTEM SET

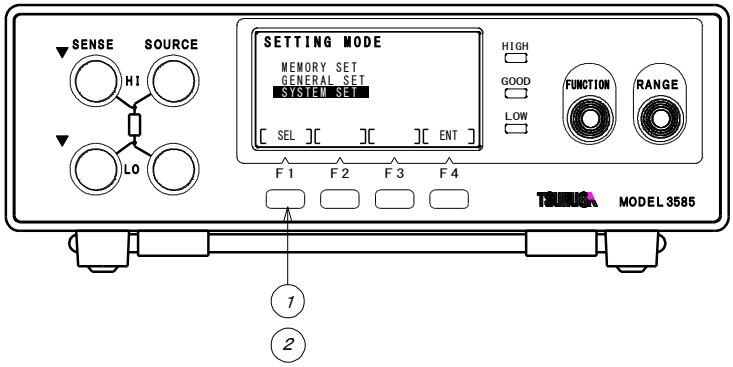

① Press the F1 [SET] key in the standby state.

Display changes to SETTING MODE.

② Press F1 [SEL] key to select SYSTEM SET.

If F4 [ENT] pressed, the display changes to SYSTEM SET.

4.5.1 Setting of contrast

Adjust the brightness of the display panel.

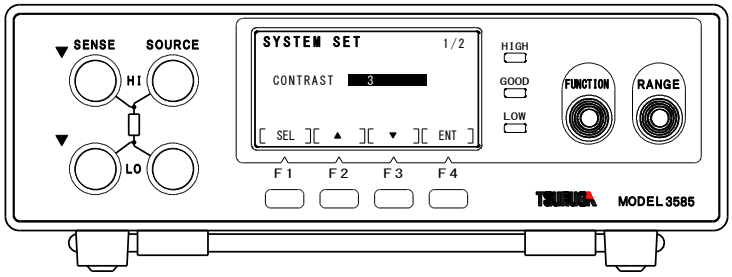

① Press F1 [SEL] key to select SYSTEM SET and press F4 [ENT] key to fix it.

Press F1 [SEL] key to select CONTRAST

② Press F2 [▲], F3 [▼] key for setting

Setting range: 1 to 5

③ Press F4 [ENT] to save the setting and the display returns to measuring mode.

Press F1 [SEL] to continue the display of equipment information.

4.5.2 Display of equipment information

Equipment information is displayed.

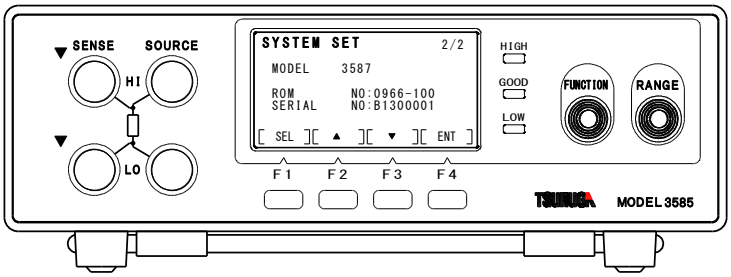

MODEL	: Model No. with or without option
ROM	: The number of the firmware
SERIAL	: Serial number of the 3585

① Press F4 [ENT] to save the setting and the display returns to measuring mode.
Press F1 [SEL] to setting of contrast.

5. External control

Selection of memory, Control of sampling hold, Signals like judgment and etc. can be obtained from the control terminal located at rear panel of the tester.

5.1 Control terminal

5.1.1 Terminal arrangement

No.	Signal name	Input / output	Function
1	O-COM	—	Output common （ 2 to 6 Common ） It is internally connected with I-COM No.7.
2	GO	Output	Comparator It is output of GOOD judgment. Output of ON is obtained during GOOD judgment.
3	LO	Output	Comparator It is output of LOW judgment. Output of ON is obtained during LOW judgment.
4	HI	Output	Comparator It is output of HIGH judgment. Output of ON is obtained during HIGH judgment.
5	ERR-CC	Output	ON is output, when SOURCE of resistance measurement input is open or the resistance is large with respect to the measurement range.
6	EOC	Output	ON is output during sampling stops. Width 2ms pulse is output during continuous sampling.
7	I-COM	—	Common （8 to 14 Common ）input It is internally connected with O-COM No. 1.
8 9 10 11	MEM1 MEM2 MEM4 MEM8	Input	Memory is called by inputting memory No. Refer to the table of memory operation (Section 5.1.5) for selection of memory.
12	0.ADJ	Input	Zero adjustment input During ON, zero adjust is activated.
13	HOLD	Input	Sampling hold input During ON, measurement is stopped, the result and judgments are retained. The output of the measurement data can be obtained through RS-232C.
14	RST	Input	Judgment reset, hold for one sampling hold input During ON, judgment output is turned OFF. When sampling hold is ON, and reset is switch to ON, one time measurement is done.

5.1.2 Connection

Compatible electrical wire: AWG26 to AWG20

End of electrical wire is peeled off as shown in figure below and wire is inserted into the terminal by pressing the release button down with help of screwdriver.

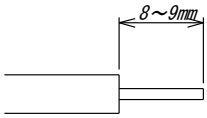

Peel length＝8 to 9 mm

5.1.3 Input / output signal

Input signal

Input ON residual voltage	: Less than 1V （ON current less than 30 mA ）
Response time	: 5ms (MAX.)

Output signal

Signal	: Open collector output (NPN)
Max. load	: DC30V 30mA
Residual voltage	: Less than 1V （During load current: 30mA）

5.1.4 External control timing chart

・Timing of measurement

Average measurement NO. 1

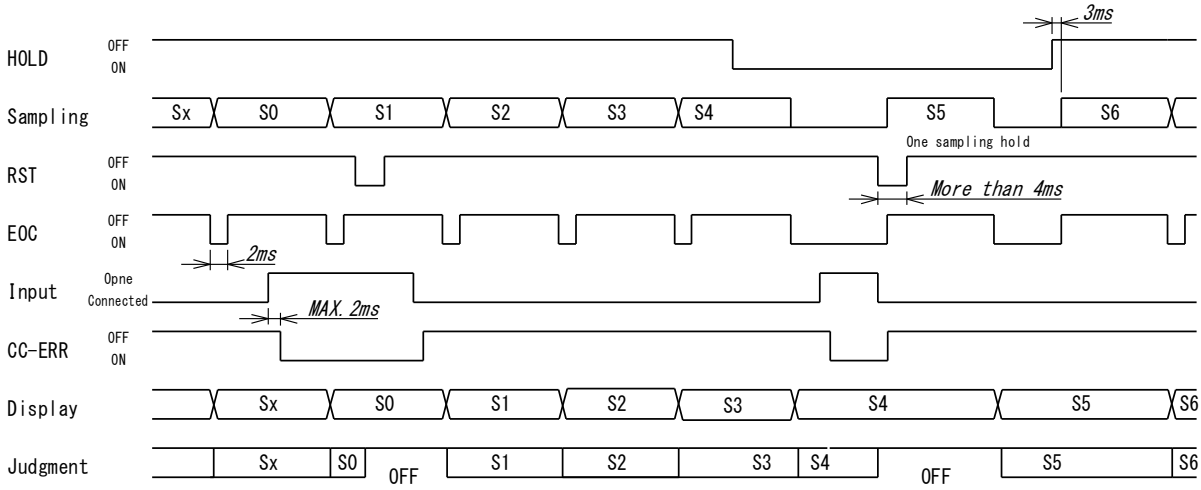

Average measurement No.2 (One sampling hold)

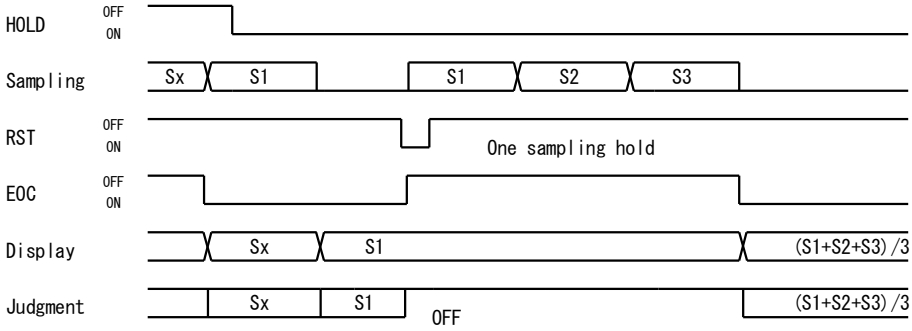

Average measurement No.3 (When HOLD is released.)

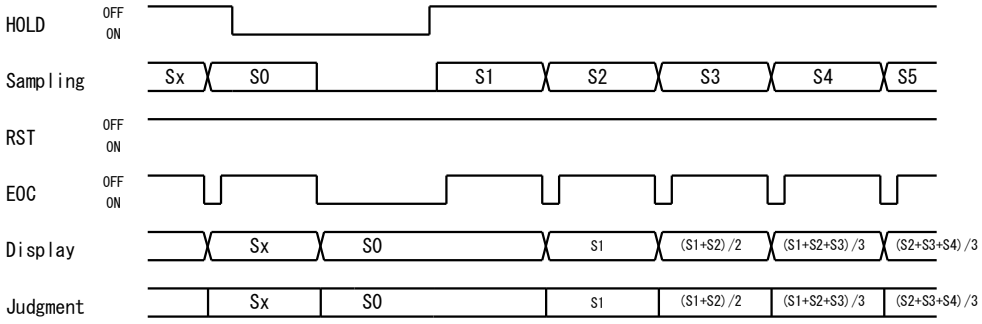

Average measurement No.3 (When the HOLD is released by the pulse.)

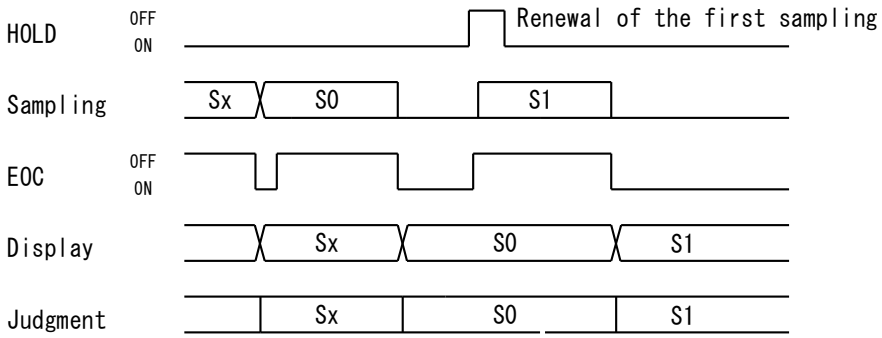

・Zero adjustment

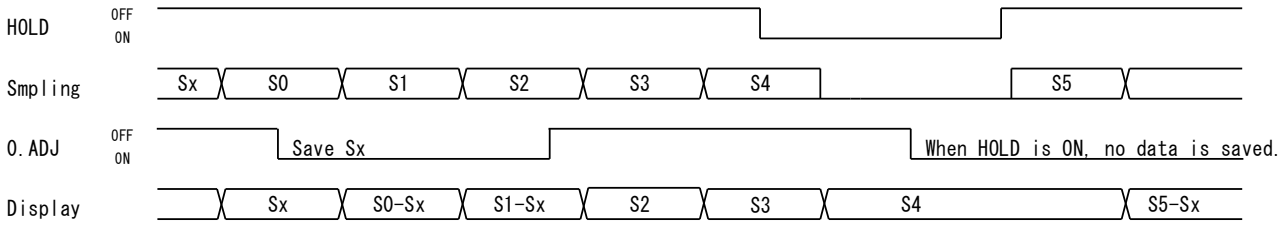

5.1.5 Memory operation

① Set the MEM.CTRL to REMOTE at GENERAL SET.

② Input the code of the memory No.

Note: Memory can't be called except the memory No. code from 1 to 15.

MEM No.	MEM1	MEM2	MEM4	MEM8
1	○	—	—	—
2	—	○	—	—
3	○	○	—	—
4	—	—	○	—
5	○	—	○	—
6	—	○	○	—
7	○	○	○	—
8	—	—	—	○
9	○	—	—	○
10	—	○	—	○
11	○	○	—	○
12	—	—	○	○
13	○	—	○	○
14	—	○	○	○
15	○	○	○	○
	Invalid except above			

○ : ON (Connection with I-COM)

– : OFF (Open)

・Memory selection

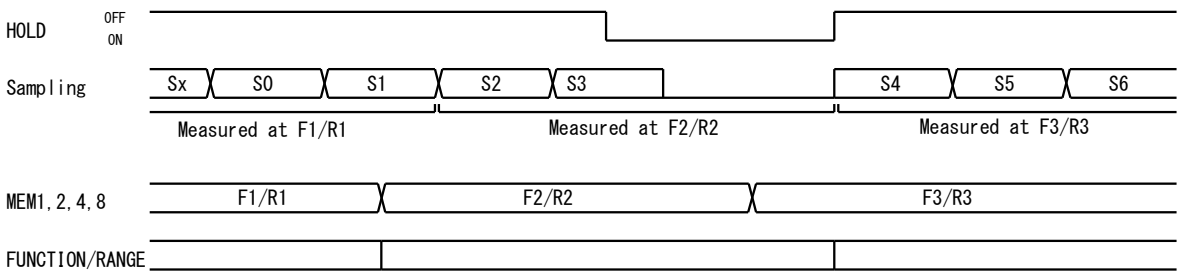

5.1.6 Internal circuit configuration

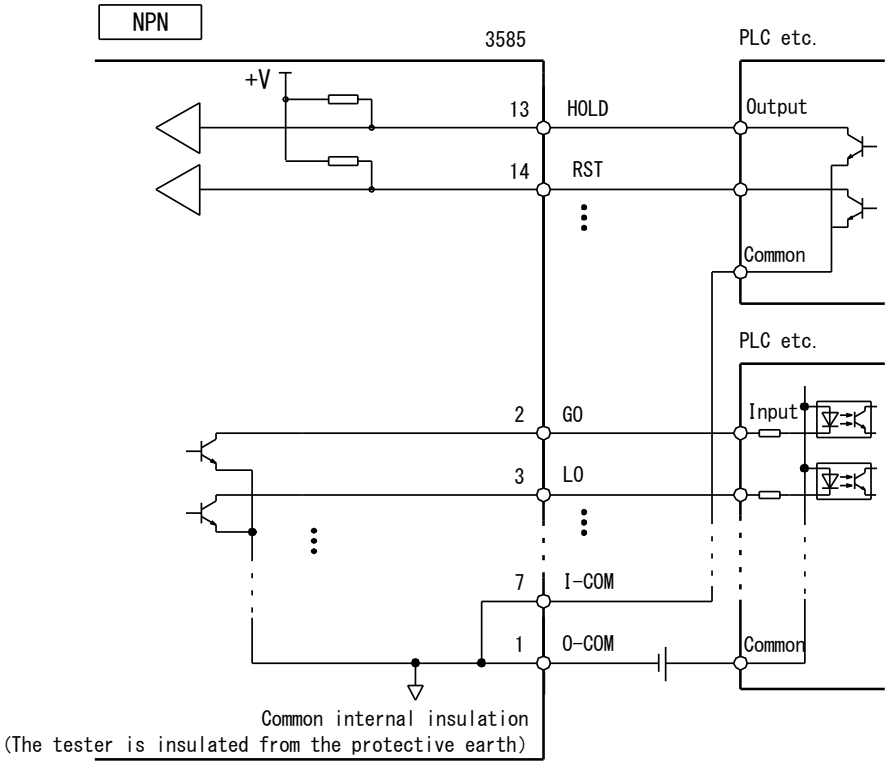

6. Communication (RS-232C)

The setting of Function, Range, Memory etc., as well as measurement data and judgment result can be obtained by RS-232C communication.

6.1 Specification

6.1.1 Communication specification

Transmission system : Start-stop synchronization Full duplex
Transmission rate : 9600, 19200, 38400bps (Factory setting 9600bps during delivery)
Data bit length : 8 bit
Stop bit : 1 bit
Parity bit : None, even number, odd number (During shipment, set: None)
Delimiter : CR+LF (0DH+0AH)
Connector : D-sub 9 Pin (Male) Inch screw type

6.1.2 Connecter pin arrangement

RS-232C connector

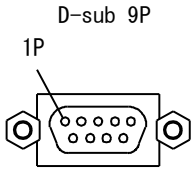

RS-232C connector arrangement

Pin No.	3585 signal JIS (RS-232C)	Direction	Function
1			Not used
2	RD (RXD)	Input	Receiving data
3	SD (TXD)	output	Transmitting data
4			Not used
5	SG (GND)		Ground signal
6			Not used
7			
8			
9			

6.1.3 Operation

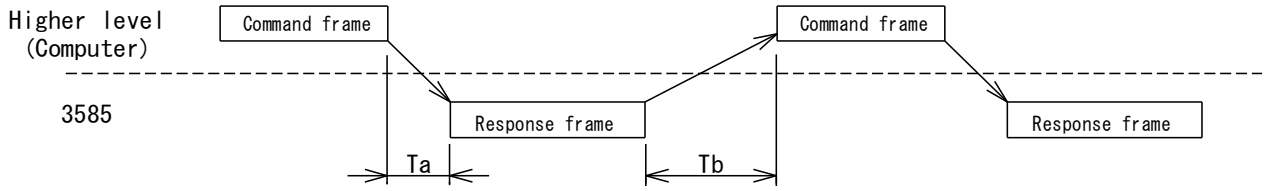

Ta Command Response time : Max. Approximately 5ms

Tb After response, command prohibition time : RS-232C Max. 5ms

Note: To control the operation by data communication, set ONLINE to ON condition in general SETTING (Refer to 4.4.6). When power is turned to OFF, ONLINE setting is returned to OFF condition. During every power ON time, ONLINE should be set to ON by outside ONLINE command. If the communication is carried out when ONLINE is OFF condition, an error response is obtained except read command.

6.2 List of communication command and response

Symbols used in command response

Symbol	Content	Hexadecimal code
SP	Space	20H
CR	Carriage return	0DH
LF	Line feed	0AH

Error response

Error response	Content
CommandErr	Command message is not right.
ERR	Not on line. Set message is not right or set value is out of range.
ERROR	Memory cannot be written down with WRITEMEMORY command.

Caution

The setting contents of communication command cannot be saved, if power is shut down.

If WRITE MEMORY command is used, the setting contents are saved in memory, eventhough power is shut down during measurement.

Command	Response	Contents
Read DATA? CR LF	OHM=SP 199.99kOHM,JUDGE=HIGH SP LOW CR LF ① ② ③ ④	Read measurement data ①Response ②Measured value ③Judgment result ④Delimiter The beginning of the measured data is sign, when plus SP, minus 「－」
	When FUNCTION=OHM,	(The minimum digit is fixed to 0 during FAST sampling.)
	OHM=SP 199.99kOHM,JUDGE=HIGH SP LOW CR LF	Measured data 199.99kΩ HIGH LOW judgment
	OHM=SP OVER SP SP kOHM,JUDGE=HIGH SP SP SP SP CR LF	Measured data Overrange HIGH judgment
	OHM=SP UNDER SP kOHM,JUDGE=LOW SP SP SP SP SP CR LF	Measured data Underrange LOW judgment
	OHM=SP ERR-C SP kOHM,JUDGE=LOW SP SP SP SP SP CR LF	Measured data Source open error LOW judgment
	OHM=SP ERR-H SP kOHM,JUDGE= HIGH SP LOW CR LF	Measured data Hardware error HIGH LOW judgment
	OHM=SP 1.0000kOHM,JUDGE=GOOD SP SP SP SP CR LF	Measured data 1.0000kΩ GOOD judgment
	OHM=SP 12.345 SP OHM,JUDGE=HIGH SP SP SP SP CR LF	Measured data 12.345Ω HIGH judgment
	OHM=SP 200.00mOHM,JUDGE=LOW SP SP SP SP SP CR LF	Measured data 200.00mΩ LOW judgment
	When FUNCTION=T.C,	
	TC=SP 123.45kOHM,R=SP 100.00 k OHM,TEMP=SP 100.0’C,JUDGE=HIGH SP LOW CR LF	Calculated value of TC 123.45kΩ the measured resistance value 100.00kΩ, temperature 100℃ HIGH LOW judgment
	TC=SP OVER SP SP SP OHM,R=SP 123.45 SP OHM,TEMP=SP OVER SP’C,JUDGE=HIGH SP SP SP SP CR LF	Calculated value of TC Overrange, the measured resistance value 123.45Ω, Temperature Overrange HIGH judgment
	TC=SP ERR-1 SP SP OHM,R=SP 123.45 SP OHM,TEMP=SP OVER SP’C,JUDGE=HIGH SP LOW CR LF	Calculated value of TC ERR-1 , the measured resistance value 123.45Ω, Temperature Overrange HIGH LOW judgment
	When FUNCTION=RATIO,	Calculated value of ratio 120.0% Standard value 100.00Ω
	RATIO=SP 120.0%,RS=SP 100.00 SP OHM,RX=120.00 SP OHM,JUDGE=GOOD SP SP SP SP CR LF	the measured resistance value120.00Ω GOOD judgment
	When FUNCTION=TEMP,	
	TEMP=SP 100.0’C CR LF	The measured value of temperature＝100℃
	TEMP=SP OVER SP’C CR LF	The measured value of temperature＝Overrange
	TEMP=-SP 019.9’C CR LF	The measured value of temperature＝-19.9℃

Command	Response	Contents
Read ONLINE?CRLF	ONLINE=REMOTE CRLF ① ② ③	Read the status of ONLINE ① Read ONLINE information ② The status ONLINE ③ Delimiter
	ONLINE=LOCAL SPCRLF	The status of OFF LINE
Set ONLINE=REMOTE CRLF	ONLINE=REMOTE CRLF ① ② ③	Set the status of on line. ① Setting of ON LINE ② Status of ONLINE ③ Delimiter
	The status of on line REMOTE LOCAL SP	During on line : Reading out of the measured data, setting and changing of set values can be controlled by RS-232C. During off line : Setting and reading out of the measured data can be controlled by RS-232C.

Command	Response	Contents
Read IDNT?CRLF	IDNT=TSURUGA,3585 SPSPSPSP,0966-100,YMF00000 CRLF ① ② ③ ④ ⑤ ⑥	Read the product information. ① Read the product information ② Manufacturer ③ Model No. ④ The number of ROM ⑤ The serial number of the product ⑥ Delimiter The product serial number label is pasted on the case.

Command	Response	Contents
Read BUZZ ? CR LF	BUZZ=GOOD,05,0 CR LF ① ② ③	Read the setting of buzzer. ① Buzzer setting ② Setting contents(condition, volume, action) ③ Delimiter
	BUZZ=OFF SP,01,1 CR LF	No buzzer volume:1 Ringing time: 1 sec. ※No buzzer rings regardless of volume of buzzer.
	BUZZ=NG SP SP,0 9 ,2 CR LF	Buzzer during NG judgment volume:9 Ringing time: 5sec.
	BUZZ=HI SP SP,05,0 CR LF	Buzzer during HI judgment volume:5 Ringing time: continuous
	BUZZ=LO SP SP,03,1 CR LF	Buzzer during LO judgment volume:3 Ringing time: 1 sec.
	BUZZ=GOOD,07,0 CR LF	Buzzer during GOOD judgment volume:7 Ringing time: continuous
Set BUZZ=GOOD,05,0 CR LF	BUZZ=GOOD,05,0 CR LF ① ② ③ ④ ⑤	Set the buzzer ① Setting of buzzer ② Condition of action ③ Volume ④ Action ⑤ Delimiter
	Condition	
	GOOD	Ringing during GOOD judgment
	NG	Ringing during NG (HI or LO) judgment
	HI	Ringing during HI judgment
	LO	Ringing during LO judgment
	OFF	No buzzer
	Volume	
	01-09	Volume 1 (Min.) to 9 (Max.) 9 steps When the condition is OFF, the ringing is ignored but the setting must be done.
	Time	
	0	Judgment output Ringing
	1	At the time of judgment Ringing for 1 sec.
	2	At the time of judgment Ringing for 5 sec.

Command	Response	Contents
Read COMP? CR LF	COMP=H SP 35.000mOHM, L SP 01.000mOHM CR LF ① ② ③ ④	Read the comparator setting of displayed memory No. ① Comparator setting ② HIGH setting ③ LOW setting ④ Delimiter
	COMP=H SP 30.000mOHM,L SP 10.000mOHM CR LF COMP=H SP 300.00mOHM,L SP 100.00mOHM CR LF COMP=H SP 2.5000 SP OHM,L SP 0.1000 SP OHM CR LF COMP=H SP 30.000 SP OHM,L SP 10.000 SP OHM CR LF COMP=H SP 300.00 SP OHM,L SP 123.45 SP OHM CR LF COMP=H SP 2.0000kOHM, L SP 1.0000kOHM CR LF COMP=H SP 30.000kOHM, L SP 20.000kOHM CR LF COMP=H SP 100.00kOHM, L SP 012.00kOHM CR LF	H=30.000mΩ, L=10.000mΩ H=300.00mΩ, L=100.00mΩ H=2.5000Ω, L=0.1000Ω H=30.000Ω, L=10.000Ω H=300.00Ω, L=123.45Ω H=2.0000 k Ω, L=1.0000 k Ω H=30.000 k Ω, L=20.000 k Ω H=100.00 k Ω, L=012.00 k Ω
Set COMP=H SP 2.0000kOHM, L SP 1.0000kOHM CR LF	COMP=H SP 2.0000kOHM, L SP 1.0000kOHM CR LF ① ② ③ ④	Set the comparator ① Setting of comparator ② HIGH setting ③ LOW setting ④ Delimiter
	Condition HIGH set ＞＝ LOW set Range -19999 to 35000, Decimal point Unit mOHM SP OHM kOHM FUNC	 Decimal point is set at the same point of HIGH setting and LOW setting. When decimal points are different from each other, setting error is shown. Comparator rage is set based on decimal point and unit character.

Command	Response	Contents
Read FUNC?CRLF	FUNCTION=OHM SPSPSPSPSPSPCRLF ① ② ③	Read the displayed function setting. ① Reading out of the function ② Function setting ③ Delimiter
	FUNCTION=OHM SPSPSPSPSPSPCRLF	Resistance measurement OHM+6 sets of SP
	FUNCTION=OHM-RATIO CRLF	Resistance measurement Ratio display
	FUNCTION=TC SPSPSPSPSPSPCRLF	Temperature correction TC+7 sets of SP
	FUNCTION=TC-RATIO SPCRLF	Temperature correction Ratio display TC-RATIO+1 of SP
	FUNCTION=TEMP SPSPSPSPSPCRLF	Temperature measurement TEMP+5 sets of SP
Setting FUNCTION=OHM SPSPSPSPSPSPCRLF	FUNCTION=OHM SPSPSPSPSPSPCRLF ① ② ③	Set the measurement function ① Function setting ② Measurement function ③ Delimiter
	Function setting	
	OHM SPSPSPSPSPSP	Resistance measurement
	OHM-RATIO	Resistance measurement Ratio display
	TC SPSPSPSPSPSPSP	Temperature correction
	TC-RATIO SP	Temperature correction Ratio display
	TEMP SPSPSPSPSP	Temperature measurement

Command	Response	Contents
Read RANGE?CRLF	RANGE=300mOHM CRLF ① ② ③	Read the displayed measurement range. ① Read the range ② Measurement range ③ Delimiter
	RANGE=SP 30mOHM CRLF	30mΩ range
	RANGE=300mOHM CRLF	300mΩ range
	RANGE=SPSP 3 SP OHM CRLF	3Ω range
	RANGE=SP 30 SP OHM CRLF	30Ω range
	RANGE=300 SP OHM CRLF	300Ω range
	RANGE=SPSP 3kOHM CRLF	3kΩ range
	RANGE=SP 30kOHM CRLF	30kΩ range
	RANGE=300kOHM CRLF	300kΩ range
	RANGE=SPSPSP AUTO CRLF	Auto range
Setting RANGE=300mOHM CRLF	RANGE=300mOHM CRLF ① ② ③	Set the measurement range ① Range setting ② Measurement range ③ Delimiter
	Measurement range	
	SP 30mOHM CRLF	Set to 30mΩ range
	300mOHM CRLF	Set to 300mΩ range
	SPSP 3 SP OHM CRLF	Set to 3Ω range
	SP 30 SP OHM CRLF	Set to 30Ω range
	300 SP OHM CRLF	Set to 300Ω range
	SPSP 3kOHM CRLF	Set to 3kΩ range
	SP 30kOHM CRLF	Set to 30kΩ range
	300kOHM CRLF	Set to 300kΩ range
	SPSPSP AUTO CRLF	Set to auto range

Command	Response	Contents
Read out MEM?CRLF	MEM=01 CRLF ① ② ③	Read the displayed memory No. ① Read the memory No. ② Memory No. ③ Delimiter
	MEM=01 CRLF MEM=15 CRLF	Memory No. 01 Memory No. 15
Setting MEM=CALL01 CRLF	MEM=CALL01 CRLF ① ② ③	Read the specified memory. ① Specify memory No. ② Memory no. ③ Delimiter
	Memory no. CALL01 CALL15 01-15	 Memory no. 01 Memory no. 15

Command	Response	Contents
Read MEM01?CRLF	MEM=01,OHM SPSPSPSPSP,300kOHM,H SP 300.00kOHM,L SP 100.00kOHM CRLF ① ② ③ ④ ⑤ ⑥ ⑦ MEM=01,OHM-RATIO,SPSP 3kOHM,S SP 3.0000 SP OHM,D SPSPSP 10.0%SPSPSPCRLF ① ② ③ ④ ⑧ ⑨ ⑦	Read the setting of the specified memory No. Read contents: Function, Range, Setting of comparator ① Read memory ② Memory No. ③ Function ④ Measurement range ⑤ HIGH setting ⑥ LOW setting ⑦ Delimiter ⑧ Standard resistance ⑨ Ratio
Set MEM=01,OHM SPSPSPSPSP,300kOHM,H SP 300.00kOHM,L SP 100.00kOHM CRLF ① ② ③ ④ ⑤ ⑥ ⑦ MEM=01,OHM-RATIO,SPSP 3kOHM,S SP 3.0000 SP OHM,D SPSPSP 10.0%SPSPSPCRLF ① ② ③ ④ ⑧ ⑨ ⑦		Set Function, Range, comparator of the specified memory No. ① Memory setting ② Memory No. ③ Function ④ Measurement range ⑤ HIGH setting ⑥ LOW setting ⑦ Delimiter ⑧ Standard resistance ⑨ Ratio
	Memory No. 01 to 15 Function OHM SPSPSPSP OHM-RATIO TC SPSPSPSPSPSP TC-RATIO SP TEMP SPSPSPSP Range (When TEMP is set, fill with space) SP 30mOHM 300mOHM SPSP 3 SP OHM SP 30 SP OHM 300 SP OHM SPSP 3 k OHM SP 30 k OHM 300 k OHM HIGH and LOW settings for OHM and TC measurements. (When TEMP is set, fill with space.) -19999 to 35000, Decimal point, range Standard resistance for OHM-RATIO and TC-RATIO. -19999 to 35000, Decimal point, range Ratio for OHM-RATIO and TC-RATIO. SPSP 000.0-100.0%SPSPSP	

Command	Response	Contents
Read TCSET?CRLF	TCSET=25.0’C, SP 3930ppm CRLF ① ② ③ ④	Read setting of temperature correction. ① Read the temperature correction setting ② Setting of the standard temperature ③ Temperature coefficient ④ Delimiter
	TCSET=25.0’C, SP 3930ppm CRLF	Standard temperature 25.0℃ Temperature coefficient 3930ppm
Set TCSET=25.0’C, 3930ppm CRLF	TCSET=25.0’C, SP 3930ppm CRLF ① ② ③ ④	Set temperature correction ① Setting of temperature correction ② Setting of standard temperature ③ Temperature coefficient ④Delimiter
	Standard temperature 00.0℃ to 99.9℃ Temperature coefficient 01000ppm to 19999ppm	

Command	Response	Contents
Read out RATIOSTD CRLF	RATIOSTD=SP 100.00mOHM,100.0%SPSPSPCRLF ① ② ③ ④	Read out the setting of ratio. ① Read setting ratio ② Standard resistance value ③ Deviation ④ Delimiter
	RATIOSTD=SP 020.00 SP OHM,010.0%SPSPSPCRLF	Standard resistance 20.0Ω Deviation 10.0%
Setting RATIOSTD=SP 100.00kOHM,100.0%SPSPSPCRLF	RATIOSTD=SP 100.00kOHM,010.0%SPSPSPCRLF ① ② ③ ④	Set ratio ① Setting of ratio ② Standard resistance value ③ Deviation ④ Delimiter
	Standard resistance value 00.000mOHM to 350.00kOHM Deviation 0.0 to 100.0%	

Command	Response	Contents
Read ZEROADJ?CRLF	ZEROADJ=SP 35.000mOHM CRLF ① ② ③	Read the zero adjustment value. ① Read zero adjustment setting value ② Value of adjustment ③ Delimiter
	ZEROADJ=SP 1.2345 SP OHM CRLF	Zero adjustment value 1.2345Ω
Set ZEROADJ=SP 35.000mOHM CRLF	ZEROADJ=SP 35.000mOHM CRLF ① ② ③	Set zero adjustment value ① Setting zero adjustment value ② Value of adjustment ③ Delimiter
	Setting value SP 30.000mOHM SP 300.00mOHM SP 3.0000 SP OHM SP 30.000 SP OHM SP 300.00 SP OHM SP 3.0000kOHM SP 30.000kOHM SP 300.00kOHM	 30mΩ 300mΩ 3Ω 30Ω 300Ω 3kΩ 30kΩ 300 k Ω
Set ZEROADJ CRLF	ZEROADJ=SUCCESS CRLF ① ② ③	Set the displayed value to zero adjustment value. ① Zero adjustment ② Response(success) ③ Delimiter

Command	Response	Contents
Read ADJUST?CRLF	ADJUST=OFF CRLF ① ② ③	Read setting of zero adjustment. ① Setting the zero adjustment ② ON or OFF ③ Delimiter
	ADJUST=ON SP CRLF ADJUST=OFF CRLF	Zero adjustment is effective Zero adjustment is invalid
Set ADJUST=OFF CRLF	ADJUST=OFF CRLF ① ② ③	Set the zero adjustment. ① Setting the zero adjustment ② Set ③ Delimiter
	Set NO SP CRLF OFF CRLF	 Enable zero adjustment Disable zero adjustment

Command	Response	Contents
Read AVRAGE?CRLF	AVERAGE=100 CRLF ② ② ③	Reads the average number setting. ① Read the value of averaging number ② Average No. ③ Delimiter
	AVERAGE=SP 10 CRLF AVERAGE=SPSP 1 CRLF	Average No. 10 times Average No. 1 time (No averaging)
Set AVERAGE=100 CRLF	AVERAGE=100 CRLF ② ② ③	Set the average No. ① Setting the number of average ② Average number ③ Delimiter
	Range of the number 1 to 100	

Command	Response	Contents
Read SAMPLING?CRLF	SAMPLING=MEDIUM CRLF ① ② ③	Read the setting of sampling. ① Read the sampling type ② Sampling ③ Delimiter
	SAMPLING=SLOW SPSPCRLF SAMPLING=FAST SPSPCRLF	SLOW sampling FAST sampling
Set SAMPLING=MEDIUM CRLF	SAMPLING=MEDIUM CRLF ① ② ③	Set the sampling. ① Setting of sampling ② Sampling ③ Delimiter
	Sampling SLOW SPSP MEDIUM FAST SPSP	 SLOW sampling MEDIUM sampling FAST sampling

Command	Response	Contents
Set WRITEMEMORY CR LF	WRITEMEMORY SP SUCCESS CR LF ① ② ③	Save the setting value to memory. （※Using this command, the setting is saved in the memory, eventhough the power is shut down.） ① Write the memory ② Result ③ Delimiter
	Result SUCCESS ERROR SP SP ERR SP SP SP SP	 Success on saving Fail on saving No online status
		Saving contents Measurement function FUNCTION Measurement range RANGE Comparator HIGH LOW Zero adjustment operation ADJUST Zero adjustment value ZEROADJ Ratio setting RARIOSTD Temperature correction setting TC Sampling setting SAMPLING Average No. setting AVERAGE Buzzer setting BUZZ Memory No. setting MEM=CALL

Command	Response	Contents
Read HOLD?CRLF	HOLD=ON SPCRLF ① ② ③	Read the status of sampling hold. ① Read response of hold ② Status of hold ③ Delimiter
	HOLD=ON SPCRLF HOLD=OFF CRLF	HOLD ON (Sampling interrupted) HOLD OFF (Sampling functions)
Set HOLD=ON SPCRLF	HOLD=ON SPCRLF ① ② ③	Set the status of sampling hold. ① Read response of HOLD ② Status of HOLD ③ Delimiter
	Setting ON SP OFF	 HOLD ON (Sampling interrupted, then measured data is output.) HOLD OFF (Sampling status)

Command	Response	Contents
Read RST?CRLF	RST=ON SPCRLF ① ② ③	Read the status of reset. ① Read the reset ② Status of reset ③ Delimiter
	RST=ON SPCRLF RST=OFF CRLF	RESET ON (Judgment output and display are OFF) RESET OFF
Set RST=ON SPCRLF	RST=ON SPCRLF ① ② ③	Set the status of judgment reset. ① Read response of reset ② Status of reset ③ Delimiter
	Setting OFF ON SP	 RESET OFF RESET ON (Judgment output and display are OFF) During HOLD ON, when RESET ON is transmitted, ONE SAMPLING HOLD works.

Command	Response	Contents
Set READ CRLF	Equivalent to "DATA?" Command (Varies depending on function)	During HOLD is ON, when READ is transmitted, one time sampling is done and measured data is transmitted. Communication command RST=ON CR is set in order to control the output of comparator during one time sampling.

7. Analog output（Option）

The measured data of 3585 can be obtained by analog data output.

7.1 Output specifications

Output	Full scale 3V　Load resistance　more than 2kΩ Output is obtained corresponding to resistance display or corrected resistance value （interlocking with zero adjustment）
Output voltage range	0.0 to 3.5V When minus display: 0.0V When over display: During OHM and OHM-RATIO: 3.5V During TC and TC-RATIO: Maximum 4.0V（Over value）
Conversion method	D/A conversion method (Resolution is approx. 0.3mV)
Accuracy	One year accuracy ±0.2% F.S. (Defined by the range of 0V-3V)
Output data	During OHM, OHM-RATIO and TEMP: Output resistance measurement value During TC and TC-RATIO: Output correction value (Display value)
Output cycle	Renewed with display cycle
Response time	Time for the output to enter within the accuracy after renewed of the display: Less than 3msec.
Resolution	1/3000

Range	Display	Analog output	Range	Display	Analog output
30mΩ 30Ω 30kΩ	0.000 mΩ	0.0000 V	300mΩ 300Ω 300kΩ	0.00 mΩ	0.0000 V
	10.000 mΩ	1.0000 V		100.00 mΩ	1.0000 V
	24.999 mΩ	2.4999 V		249.99 mΩ	2.4999 V
	30.000 mΩ	3.0000 V		300.00 mΩ	3.0000 V
	35.000 mΩ	3.5000 V		350.00 mΩ	3.5000 V
	OVER	3.5000 V		OVER	3.5000 V
3Ω 3kΩ	0.0000 Ω	0.0000 V			
	1.0000 Ω	1.0000 V			
	2.4999 Ω	2.4999 V			
	3.0000 Ω	3.0000 V			
	3.5000 Ω	3.5000 V			
	OVER	3.5000 V			

When the display is under 0 due to the zero adjustment function etc., the output of 0.0000V is obtained. In case of temperature correction, the corrected resistance value exceeds 35000 and is calculated till maximum 39999. In this case analog output with maximum 4.000V together with the display is obtained.

Measurement function and output data

FUNCTION	Analog output
TRMP	Resistance measurement value (OHM)
OHM	Resistance measurement value (OHM)
OHM-RATIO	Resistance measurement value (OHM)
T.C	Corrected resistance value (T.C)
TC-RATIO	Corrected resistance value (T.C)

8. BCD output (Option)

The measured data of 3585 can be obtained by BCD data output.

8.1 Output specifications

8.1.1 TTL output (-03)

The output of BCD data can be obtained with TTL level.

Output method: BCD parallel code Positive logic

Output “L” level with logic “0”. Output “H” level with logic “1”.

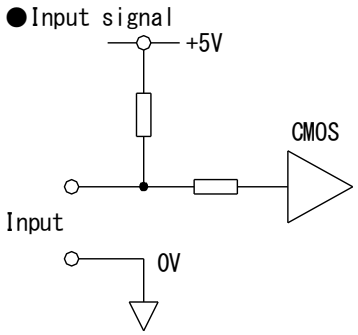

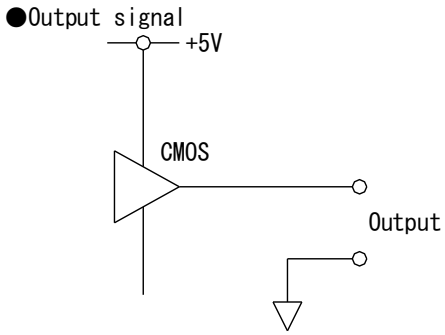

Input level : I_{IL} ≦-1mA
“L” =Less than 0.8V
“H” =3.5 to 5V

Output level : TTL level
Ioh=4mA
Iol=-4mA

8.1.2 Open collector output (-04)

The output BCD data can be obtained with open collector.

Output method: BCD parallel code

Output “OFF” with logic “0”, output “ON” with logic “1”.

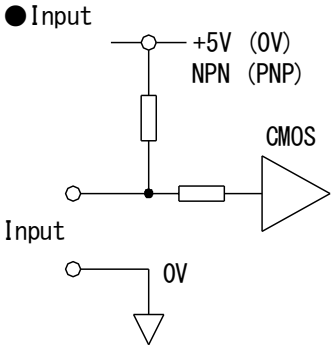

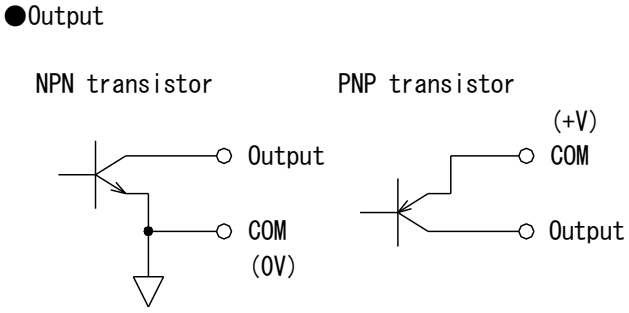

Input level : I_{IL} ≦-1mA
“L” =Less than 1.5V
“H” =3.5 to 5V

Output capacity : DC30V、30mA

8.2 Connector pin array

Signal name		No.		Signal name	
UNIT	0	1	26	4	UNIT
	1	2	27	5	
	2	3	28	6	
	3	4	29	7	
$\times 10^0$	1	5	30	1	$\times 10^1$
	2	6	31	2	
	4	7	32	4	
	8	8	33	8	
$\times 10^2$	1	9	34	1	$\times 10^3$
	2	10	35	2	
	4	11	36	4	
	8	12	37	8	
$\times 10^4$	1	13	38	POL	
OUTPUT ENABLE		14	39	OVER	
nHOLD		15	40	nSTROBE	
DP1		16	41	1	SEL
DP2		17	42	2	
DP3		18	43	4	
DP4		19	44	2	$\times 10^4$
FUNCTION	1	20	45	1	RANGE
	2	21	46	2	
	4	22	47	4	
	8	23	48	8	
INT. / nEXT.		24	49	NC (+V COM) ※	
DATA COM		25	50	DATA COM	

Connector in use: Amphenol 50 pin

※Pin No. 49 is allocated for +V COM in case of BCD option of PNP type (3585-04P).

8.3 Description of input and output signals

8.3.1 Output signal

Measured data output: 1,2,4,8 ($\times 10^0$-$\times 10^4$)

The output of the measured data is obtained with parallel BCD codes.
Note) During F sampling, 10^0 outputs.

Decimal point output

The output of decimal point is obtained corresponding with the measurement range as shown below.

Display	DP4	DP3	DP2	DP1
3.5000	0	1	1	1
35.000	1	0	1	1
350.00	1	1	0	1
100.0	1	1	1	0

Unit output

Unit is shown by the code as below.

Unit	Code							
	7	6	5	4	3	2	1	0
mΩ	1	0	0	1	1	0	0	0
Ω	1	1	1	1	1	1	1	0
kΩ	0	1	1	0	0	1	0	1
℃	1	0	1	1	0	0	0	1
%	1	1	1	0	0	0	0	0

Polarity output

Polarity	POL
Plus (+)	1
Minus (-)	0

Over output

Measurement	OVER
OVER	1
Not over	0
Error 1	1

Strobe output (STROBE)

When data is renewed, the output of “L” pulse is obtained.

Pulse width During S, M sample, 10ms

During F sample, 1 msec.

8.3.2 Input signal

Enable (OUTPUT ENABLE)

In case of “L” level, all the outputs except STROBE become “High Impedance”.

Selecting output signals

The data output on BCD is selected by SEL1, SEL2 and SEL4.

Output data (SEL1, SEL2, SEL4)

During selecting data, make it sure that 3585 is in HOLD status.

SEL code	0	1	2	3	4	5	6	7
OHM	OHM	OHM	OHM	OHM	OHM	OHM	OHM	OHM
TC	Err3	Rt	t	Err3	Err3	Err3	Err3	RT
RATIO (OHM)	Err3	Rs	Rx	Err3	Err3	Err3	Err3	X
RATIO (TC)	Err3	Rs	RT	Rt	t	Err3	Err3	X
TEMP	TEMP	TEMP	TEMP	TEMP	TEMP	TEMP	TEMP	TEMP

Rt : Resistance at certain ambient temperature
RT : Corrected resistance (Calculated)
Rx : Resistance value
t : Ambient temperature
Rs : Standard resistance value
X : Ratio

Range input (RANGE)

When the input of the range code is done, make sure that the INT./nEXT. is at “L” level.

Range	Code			
	8	4	2	1
AUTO	0	0	0	0
30mΩ	1	0	0	0
300mΩ	0	0	0	1
3Ω	0	0	1	0
30Ω	0	0	1	1
300Ω	0	1	0	0
3kΩ	0	1	0	1
30kΩ	0	1	1	0
300kΩ	0	1	1	1

Function input (FUNC)

When the input of the function code is done, make sure that of INT./nEXT. is at “L” level.

Function	Code			
	8	4	2	1
Resistance measurement	1	0	0	1
Temperature measurement	1	0	0	0
Temperature correction	0	1	0	0
Ratio (OHM)	0	1	1	1
Ratio (TC)	0	1	0	1

HOLD input (nHOLD)

Sampling is performed at “H” level and the output of the measuring data is obtained sequentially.

Sampling is stopped at “L” level and the BCD data, displayed value are retained.

External control input (INT./nEXT.)

The selection of function and range can be done at “L” level. But the control can’t be done during HOLD mode. If MEM. CTRL is set as REMOTE, priority is given for the REMOTE operation.

Timing chart

Average No. = 1 time

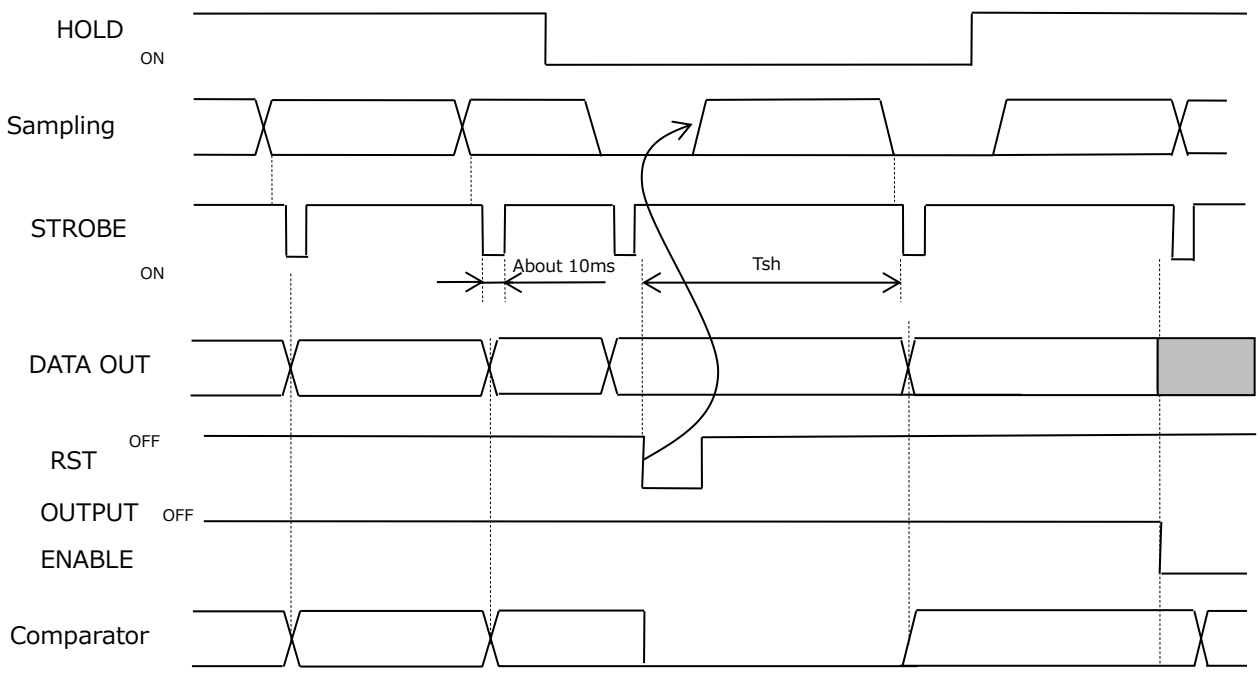

Tsh: Sampling cycle + Processing time

: Hi Impedance

Data select timing chart

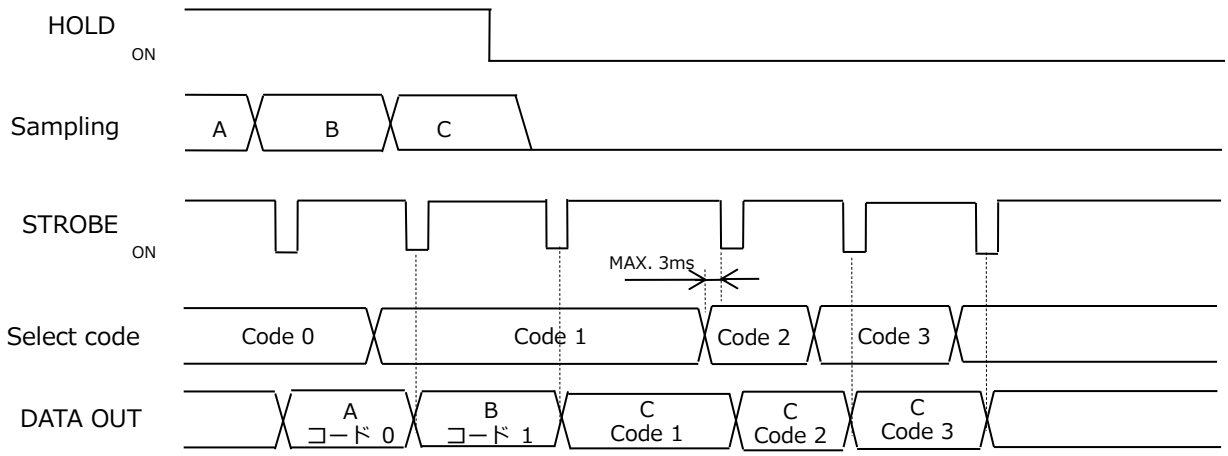

If the select code is changed during sampling, the data after the end of the sampling is affected.

If select code is changed during HOLD, output also change corresponding to the change of the code.

FUNCTION switching timing chart

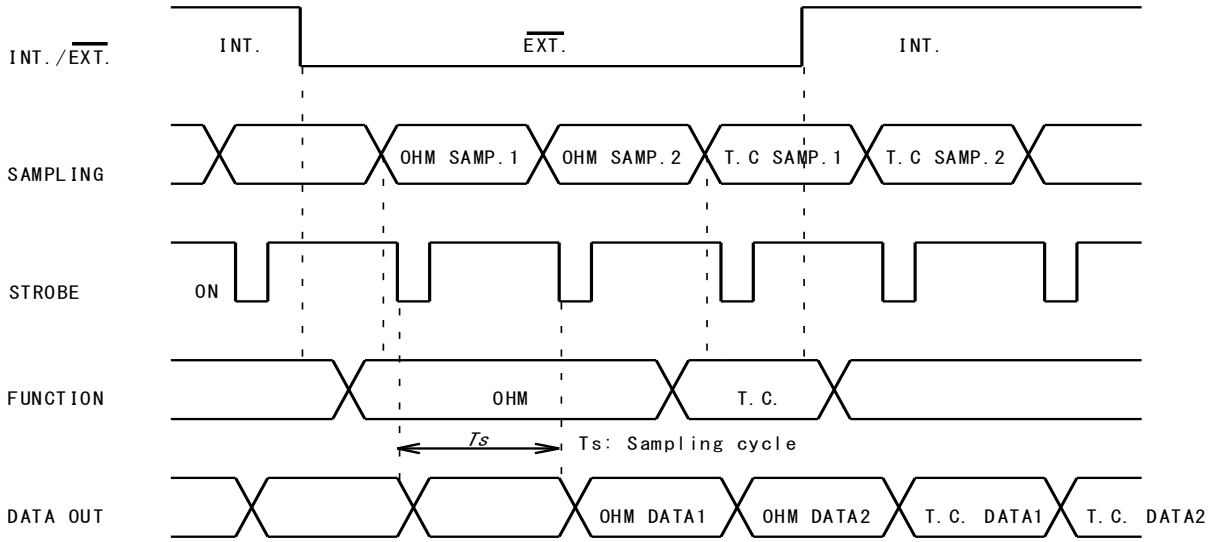

9. Error display

Display	Name	Description
OVER	Over	The measurement is over range.
UNDER	Under	The measurement is under range.
ERR-CC or ERR-C	Source open	When SOURCE of the resistance measurement input is open or the resistance is large with the respect to the measurement value.
ERR1 or ERR-1	Error of temperature sensor	Confirm the connection of temperature sensor.
ERR-2	Calculation error	BCD option Exceeds the range of ratio calculation.
ERR-3	Select error	BCD option There is error in display select code.

Internal error code

If the hardware malfunction (ERR-HD) is detected, internal error code [ERR != ABCD] is shown on the display (OLED).

If the error is not solved even restart is done, the possibility of malfunction is high. Contact the distributor or the nearest office of TSURUGA ELECTRIC CORPORATION with the displayed error code for inspection or repairing.

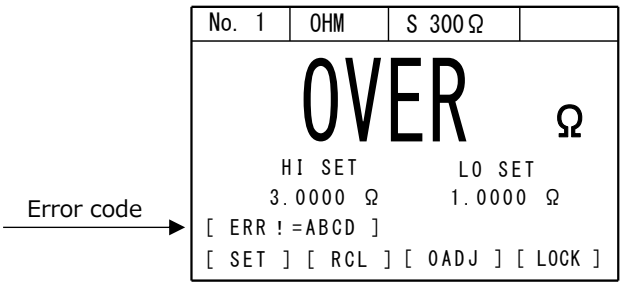

Digit	Bit	Description
A	8,4,2,1	Reserved
B	8 4 2 1	Reserved Reserved Option function abnormal communication (ERR-HD) Abnormal internal communication (ERR-HD)
C	8 4 2 1	Abnormal ADC communication for resistance measurement (ERR-HD) Abnormal ADC communication for temperature sensor (ERR-HD) Protection action against over-voltage input Source open (ERR-CC)
D	8 4 2 1	Data select error of BCD (ERR-3) Calculation error (ERR-2) Temperature over (ERR-1) Measurement over (ERR-0)

10. Use in panel-mount

10.1 Assembly drawing

When the tester is used by panel-mounting, use the optional panel-mount bracket.

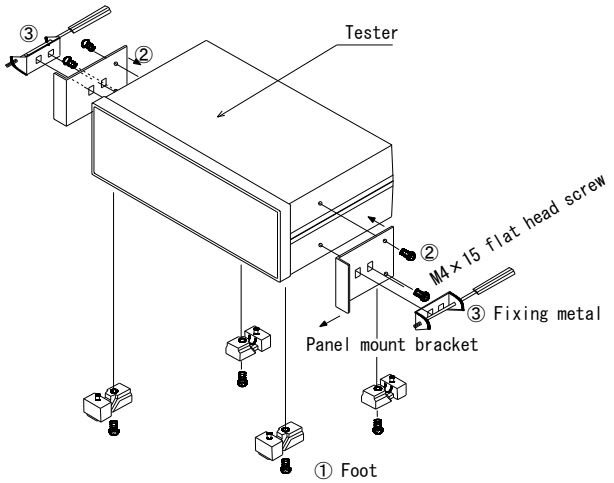

① Remove the feet (4 parts) at the bottom of the tester.

② Fix the panel-mount bracket to both side of the tester (M4×15flat head screw)

③ Insert the tester from the front of the panel and fix it to the panel with the fixing metal.

Note: In case that the tester is installed to the chassis, utilizing the bottom screw taps of the testers, keep the length of screw at 6mm + thickness of chassis (mm).

10.2 External dimensions when fitted with panel-mount bracket

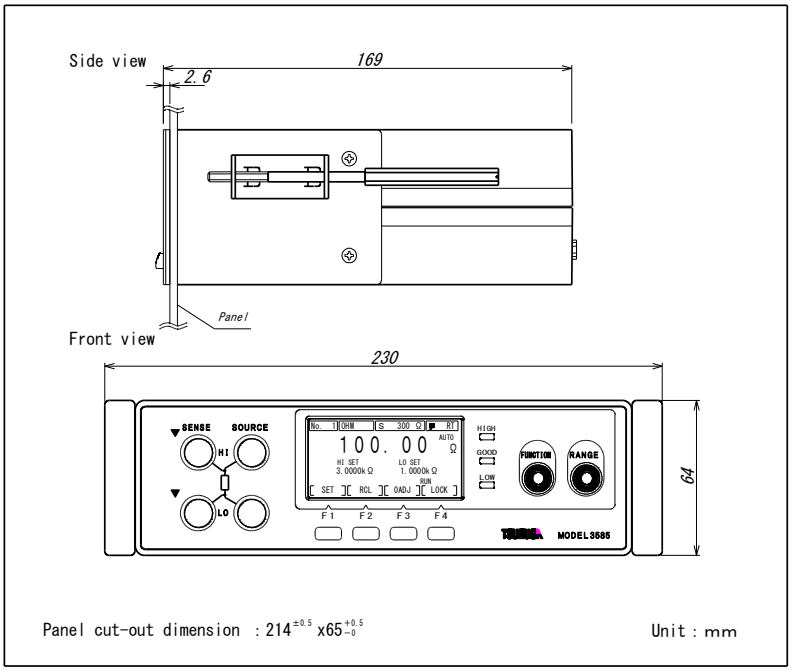

⚠ Warning

●Set the power switch near the instrument when it is used in panel mount.

11. Maintenance

Cleaning

When the front panel or the case becomes dirty, wipe it with soft cloth.
For heavy dirt, wipe it lightly with the soft cloth wetted with the water thinned by neutral cleaner.
Do not use cleaners containing thinner, benzene, alcohol, acetone, ketone, ether or petroleum based detergent as they may deform or discolor the case.

Calibration

The regular calibration is needed to obtain correct measurement result within the range of specified accuracy.
The cycle of calibration depends on actual usage condition and environment of customers. We recommend for regular calibration at TSURUGA ELECTRIC CORPORATION depending on the condition of tester used by customers.

Transportation

During transportation of this tester, be careful of not to damage it by using proper packing box.
The damage on transportation cannot be guaranteed.
During repair request, attach the detail of trouble information.

12. Failure symptom

When the tester is supposed to be faulty, please check the following points before requesting the repair of it.

Symptom	Check points
Although the power is turned ON, display does not light up.	・Is power supply connected to socket properly?
Key is not operable.	・Isn't the LOCK lamp lit up? Cancel the key lock referring to the section 3.5.

9. Among error displays, internal error code might mean the malfunction.
For repair, contact the nearest office of TSURUGA ELECTRIC CORPORATION.

13. Specifications

13.1 Model name

Model name	Description
3585- X	Without BCD data output, with RS-232C
3585-03	With BCD data output (TTL output), with RS-232C
3585-04P	With BCD data output (Open collector PNP), with RS-232C
3585-04N	With BCD data output (Open collector NPN), with RS-232C
3585-07	With analog output (Voltage output 1 point), with RS-232C

13.2 Measuring range and accuracy

Resistance measurement

During SLOW, MEDIUM sampling

Range	30mΩ	300mΩ	3Ω	30Ω	300Ω	3 kΩ	30 kΩ	300 kΩ
Resolution	1μΩ	10μΩ	100μΩ	1mΩ	10mΩ	100mΩ	1Ω	10Ω
Current	DC300mA	DC100mA		DC10mA	DC1mA		DC10μA	
Max. applied voltage	9mV	30mV	300mV			3V	300mV	3V
Accuracy	Note 1	±(0.08% of rdg. +3digit)						
Temperature coefficient	Note 2	±(0.01% of rdg. +0.5digit) / ℃						
Open terminal voltage	DC6V max.							

Note 1) ±(0.2% of rdg. +10digit) Note 2) ±(0.02% of rdg. +1digit)
Accuracy: One-year accuracy Defined at 23℃±5℃, 45 to 75%RH.
Sampling During MEDIUM, 3 digits are added to the accuracy.
Measurement resolution 1/30000

During FAST sampling

Range	30mΩ	300mΩ	3Ω	30Ω	300Ω	3kΩ	30kΩ	300kΩ
Resolution	10μΩ	100μΩ	1mΩ	10mΩ	100mΩ	1Ω	10Ω	100Ω
Current	DC300mA	DC100mA		DC10mA	DC1mA		DC10uA	
Max. applied voltage	9mV	30mV	300mV			3V	300mV	3V
Accuracy	Note 3	±(0.2% of rdg. +5digit)					Note 5	
Temperature coefficient	Note 4	±(0.01% of rdg.+ 0.1digit) / ℃					Note 6	
Open terminal voltage	DC6V max.							

Note 3) ±(0.3% of rdg. +15digit) Note 4) ±(0.03% of rdg. +2digit)
Note 5) ±(0.5% of rdg. +20digit) Note 6) ±(0.05% of rdg. +2digit)
Accuracy : One- year accuracy Defined at 23℃±5℃, 45 to 75%RH.
Measurement resolution 1/3000

Temperature measurement

Range	−19.9 to 199.9 ℃
Resolution	0.1 ℃
Accuracy	±(0.2% of rdg. +0.2℃)
Temperature coefficient	±(0.02% of rdg. +0.02℃) / ℃
Sensor	Pt100Ω 3 leads method (Resistance of lead: Less than5Ω)
Current	1 mA

Accuracy : One-year accuracy Defined at 23℃±5℃, 45 to 75%RH.

13.3 General specifications

Measurement method	4 terminal method (Front / Rear)
Maximum allowable applied voltage	Whole range 100V DC
Measurement cable resistance	SOURCE wires 30mΩ range Less than 2Ω Others Less than 5Ω
Display	OLED display Display range

Function	Display range
Resistance measurement	-19999 to 35000, OVER, UNDER (-1999 to 3500 at FAST.)
TC calculation	-39999 to 39999, OVER, UNDER
RATIO calculation	-199.9 to 199.9, OVER, UNDER
Temperature measure-ment	-19.9 to 199.9, OVER, UNDER

Measurement range	30mΩ, 300mΩ, 3Ω, 30Ω, 300Ω, 3kΩ, 30kΩ, 300kΩ, AUTO AUTO range Range up More than 35000 (FAST sampling More than 3500) Range down Less than 3000 (FAST sampling Less than 300)
Over display	OVER UNDER
Error display	ERR-1 When FUNCTION are TC, TC-RATIO and temperature measurement is over.
ERR-CC display	When SOURCE of resistance measurement input is open, or SOURCE is larger than the measurement range. If FUNCTION is in TEMP mode, this error is not displayed.
Internal error display	[ERR != ABCD] Error code is displayed in ABCD part, when internal error of the hardware is detected.
Unit display	mΩ, Ω, kΩ, %, ℃
Sampling rate	Resistance measurement SLOW 5 times / sec. MEDUUM 20 times / sec. FAST 90 times / sec. Temperature measurement 5 times / sec.
Response speed 1	The required time to measure accurately (fixed range) from the input open to specimen connection. Resistance measurement SLOW Approx. 400ms MEDIUM Approx. 100ms FAST Approx. 25ms Temperature measurement Approx. 500ms
Response speed 2	During the connection with the specimen and HOLD state, the time required from the measurement start to judgment output (fixed range). Resistance measurement SLOW Approx. 210ms MEDIUM Approx. 57ms FAST Approx. 20ms Temperature measurement Approx. 500ms

Noise rejection ratio	Normal mode More than 60dB (Max. applied voltage conversion) During sampling SLOW Common mode More than 100dB (Max. applied voltage conversion) During sampling SLOW
Parameter retention	Retained in the non-volatile memory Rewritable approx..100,000 times Retention period approx. 10 years
Insulation resistance	Power supply terminal / Outer case More than DC500V 100MΩ Measuring terminals / Control terminals, RS-232C, Data output More than DC500V 10MΩ
Withstand voltage	Measuring terminals, Control terminals, RS-232C, Data output / Outer case 500V AC for 1 minute Power supply terminal / Outer case 1500V AC for 1 minute
Power supply voltage	AC100 to 240V 50 to 60Hz
Power supply voltage tolerance range	AC90 to 250V
Power consumption	17VA max.
Temperature	0 to 40℃
Humidity	Less than 80% RH (No condensation)
Storage temperature	-20 to 70℃, Less than 70%RH (No condensation)
Use environmental conditions	Indoor use Altitude: Less than 2000 m Overvoltage category: OVCⅡ Pollution degree: 2 Allowable transient overvoltage of main supply: 1000V (1μs)
Protection grade	IP20 equivalent
Dimension	205(W) × 64(H) × 169(D) mm
Weight	Approx. 1kg
Accessories	Power supply cord for AC 100V 1 piece Operation manual 1 copy Utility software (With RS-232C cable) 1 sheet of CD
Option	Kelvin clip (Standard type: Model 5811-21C) Kelvin clip (Dual axis pin type: Model 5811-41) Kelvin clip (Coaxial pin type: Model 5811-42) Temperature sensor (Model 5803-11) Panel-mount bracket (Model 5811-31) Power supply cord for AC 200V (Model 5880-23-030)

13.4 Adaptability

This product is in conformity with the following standards ;

EN61010-1 2010

Pollution degree 2

Overvoltage category OVCⅡ

Measurement category CAT 0

EN61326-1 :2013 Table2 *1

EN55011:2009+A1:2010

EN61000-4-2:2009

EN61000-4-3:2006+A1:2008+A2:2010

EN61000-4-4:2012

EN61000-4-5:2014

EN61000-4-6:2014

EN61000-4-8:2010

EN61000-4-11:2004

EN50581:2012

*1 In Industrial Locations

Influence

Resistance measurement function	±(0.3% of rdg. +15digit)
Analog output function	±(0.3% of F.S.)

Configuration

Kelvin clip : 5811-21C

BCD data output: BCD cable shielded type

13.5 Initial setting list (at the factory shipment)

Item		Setting range	Initial setting Note (factory setting)	Memory (1 to 15)
Key lock		ON/OFF	OFF	—
Sampling		SLOW / MEDIUM / FAST	SLOW	—
Zero adjustment		ON/OFF	OFF	○
Zero adjustment value		0 to 35000	0	○
Buzzer setting		OFF / GO / HI / LO / NG	OFF	—
Buzzer volume		1 to 9	3	—
Buzzer ringing time		Continuous / 1 sec. / 5 sec.	Continuous	—
RS-232C	Communication speed	9600 / 19200 / 38400 (bps)	9600 (bps)	—
	Parity	None / Even / Odd	None	—
TC temperature coefficient		1000 to 19999 (ppm)	3930 (ppm)	○
TC standard temperature		0.0 to 99.9 (℃)	20.0 (℃)	○
Averaging function		1 to 100	1	—
Control of measurement current		ON/OFF	OFF	—
Memory No.		01 to 15	01	—
Function		OHM / TEMP / TC / OHM-RATIO / TC-RATIO	OHM	○
Range		30mΩ / 300mΩ / 3Ω / 30Ω / 300Ω / 3kΩ / 30kΩ / 300kΩ / AUTO	3Ω	○
Comparator H		-19999 to 35000	30000	○
Comparator L		-19999 to 35000	10000	○
Comparator range		30mΩ / 300mΩ / 3Ω / 30Ω / 300Ω / 3kΩ / 30kΩ / 300kΩ	3Ω	○
RATIO deviation		0.0 to 100.0	10.0	○
RATIO range		30mΩ / 300mΩ / 3Ω / 30Ω / 300Ω / 3kΩ / 30kΩ / 300kΩ	3Ω	○
RATIO standard resistance		0 to 35000	30000	○

Note: The setting can be reset to initial value by pressing both [F2] and [F3] simultaneously for more than 5 seconds.

13.6 External dimensions

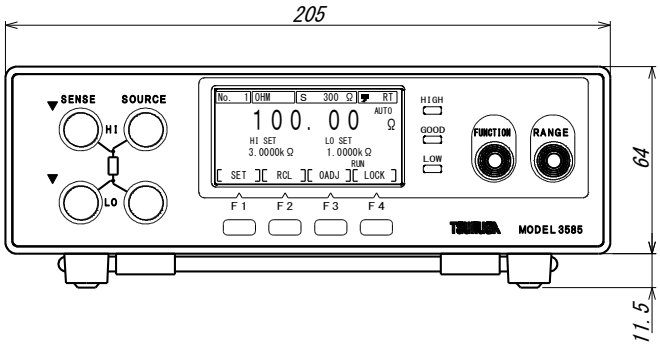

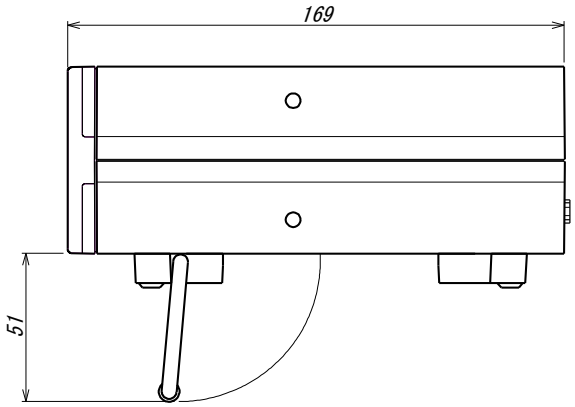

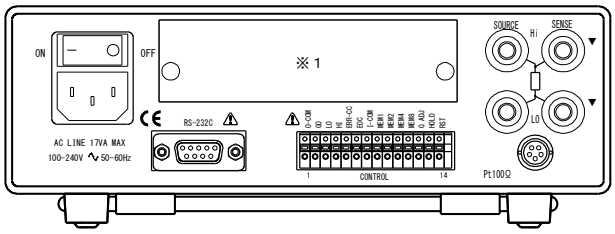

※1 With BCD output

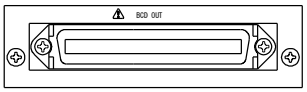

※1 With analog output

Tsuruga Electric Corporation

Osaka Headquarters
1-3-23, Minamisumiyoshi, Sumiyoshi-ku, Osaka, Japan 〒558-0041
TEL 81-6 -6692-6700, FAX 81-6 -6609- 8115
E-mail: ft.info@tsuruga.co.jp

Yokohama Office
1-29-15, Shinyokohama, Kohoku-ku, Yokohama, Kanagawa, Japan 〒222-0033

Tokyo Office
5-25-16, Higashigotanda, Shinagawa-ku, Tokyo, Japan 〒141-0022

Nagoya Office
Sun Park Higashi Betsuin Bld. 2F
5-19, Oicho, Naka-ku, Nagoya, Aichi, Japan 〒460-0015

Osaka Plant
1-3-23, Minami Sumiyoshi, Sumiyoshi-ku, Osaka, Japan 〒558-0041

Shiga Plant
122, Kawasaki-Cho, Nagahama, Shiga, Japan 〒526-0846

www.tsuruga.co.jp